EXERCISE BOOK

Student Notes:

CATIA V5 Training
Exercises

Advanced Drafting and Customization

Version 5 Release 19
January 2009

EDU_CAT_EN_DRA_AX_V5R19

Student Notes:

Table of Contents (1/2)

Student Notes:

Table of Contents (2/2)

Student Notes:

Exercise - The Plate

45 min

In this exercise you will create dimensions and annotations on a specific drawing starting from a predefined standard.

You will need to create a new Company standard with specific parameters and styles

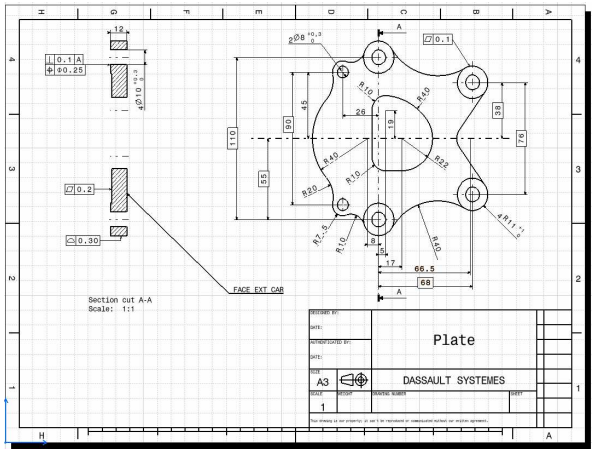

Student Notes:

Design Intent: The Plate

- Creating a new company standard
- Creating Length/Distance Dimensions
- Creating Radius/Diameter Dimensions
- Creating Annotations

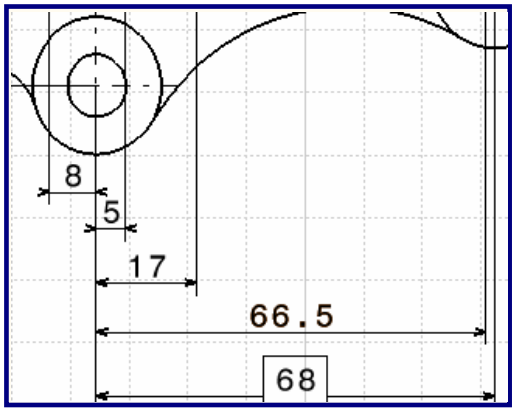

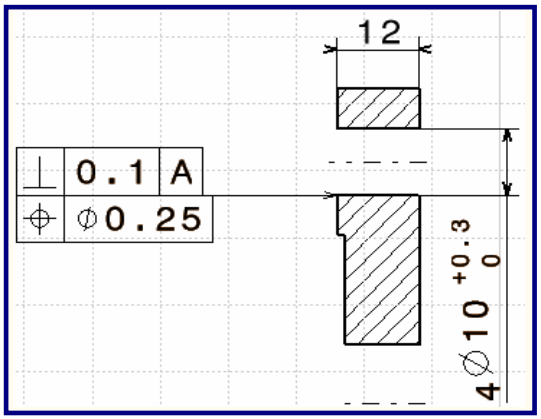

EXERCISE BOOK

Student Notes:

Design Process: The Plate

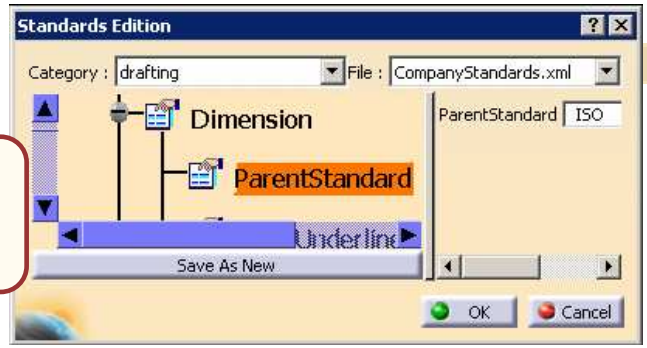

1 Customize standard parameters & styles and create a new company standard

2 Create length dimensions with the new standard

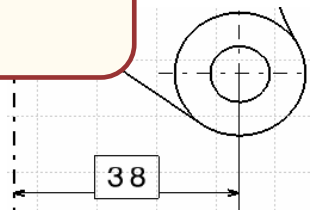

3 Create Radius dimensions with the new standard

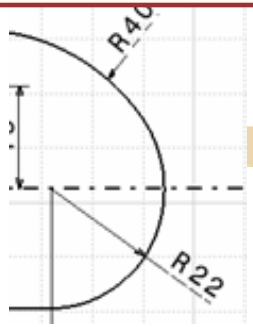

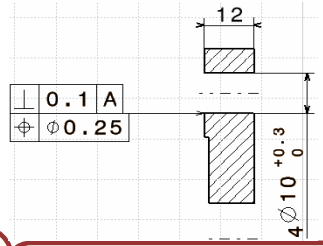

4 Add tolerances and annotations

Student Notes:

Do It Yourself (1/5)

Load: Plate_Step0.CATDrawing

Customize ISO Standard and save it as “company standard”

- **All length/distance dimensions must have the same following properties :**
  - The thickness of the dimension line symbols is 0.35mm
  - All the extension line go to the geometry (no blanking)
  - All the dimension values must be displayed using a point

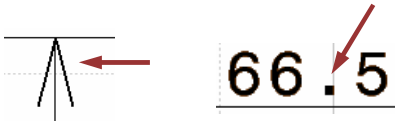

- **For framed values, the frame must not be aligned with dimension line**
  - Create a 1 mm offset

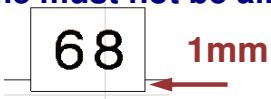

- **For dimensions with outside arrows, don’t display dimension line outside**

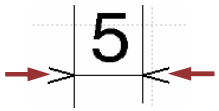

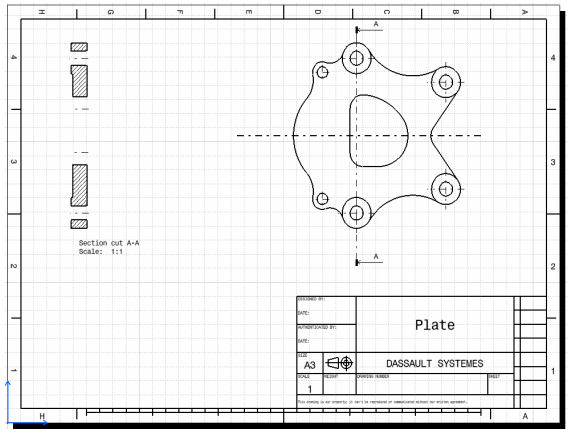

Student Notes:

Do It Yourself (2/5)

- **All radius/diameter dimensions must have the same following properties :**
  - The thickness of the dimension line symbols is 0.35mm
  - All the extension line go to the geometry (no blanking)
  - All the dimension values must be displayed using a point

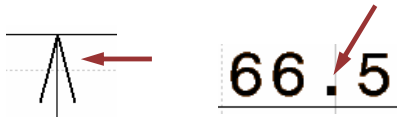

- **Place the radius dimensions exactly as it is represented on the model next page**
  - Respect the specifications of the dimension line

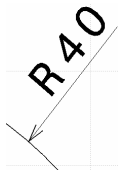

- **Modify the position of the Text before (subscripted in relation to the value)**

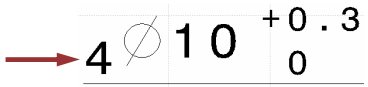

- **Update the current drawing using the new created “company” standard**

Student Notes:

Do It Yourself (3/5)

Create Length dimensions as shown

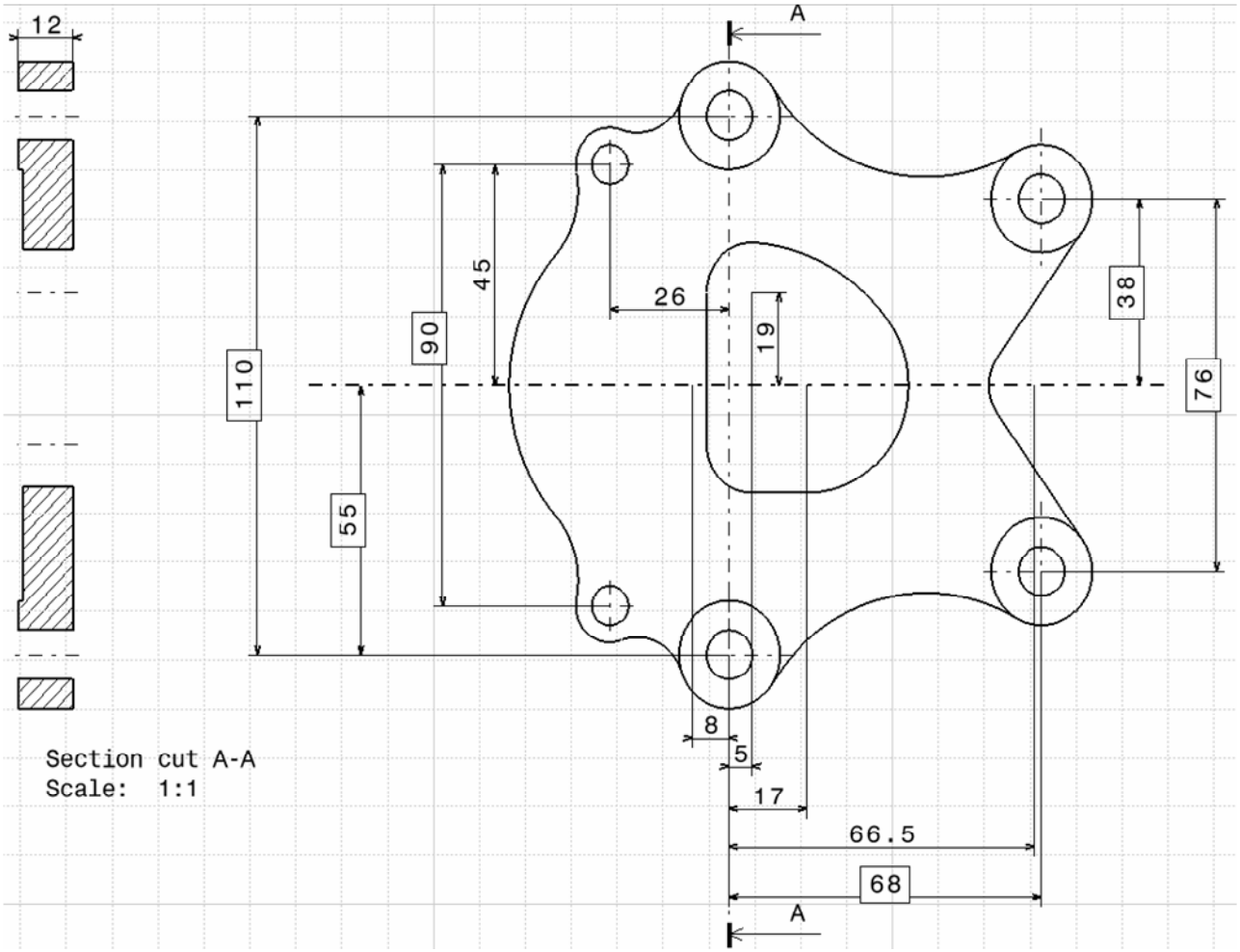

Reference Available : Plate_Step1.CATDrawing

EXERCISE BOOK

Student Notes:

Do It Yourself (4/5)

Create Radius dimensions

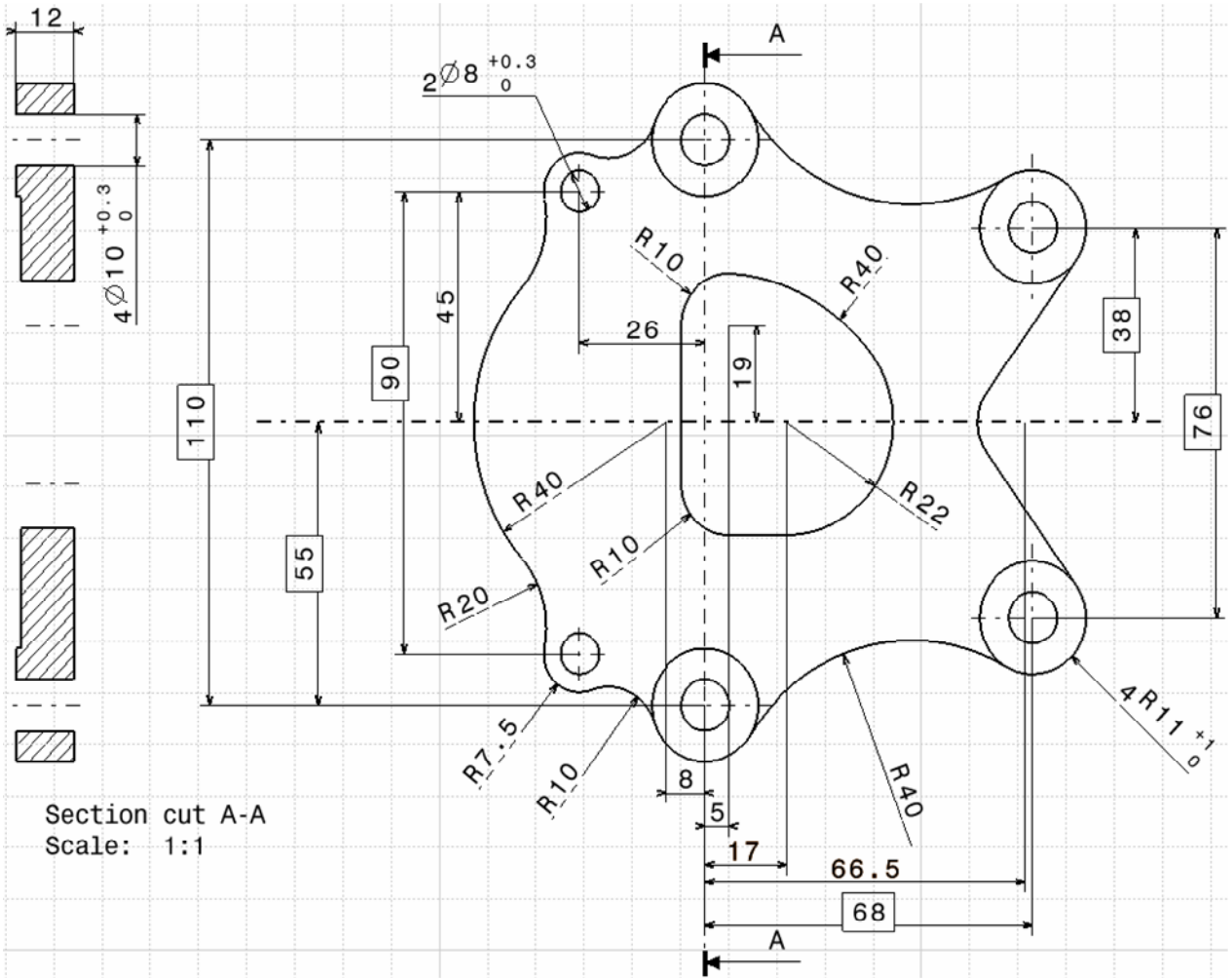

Reference Available : Plate_Step2.CATDrawing

Student Notes:

Do It Yourself (5/5)

Add tolerances and annotations

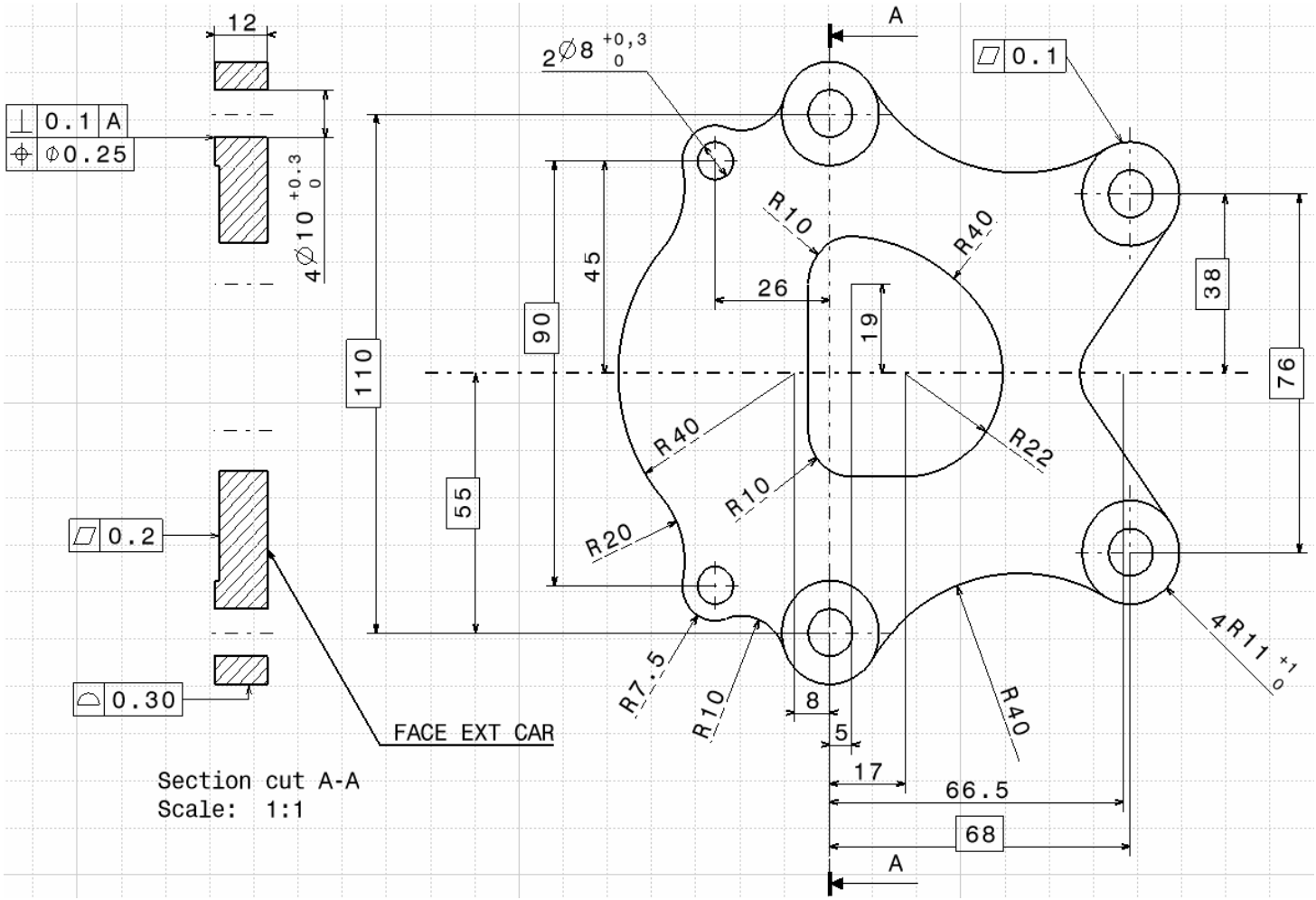

Reference Available : Plate_Step3.CATDrawing

Student Notes:

Exercise - The Pivot

45 min

In this exercise you will create dimensions, texts, annotations and a new style of Tolerance Description on a specific drawing starting from a predefined standard.

You will need to create a new Company.XML file using the existing ISO.XML file in order to fulfill the requested the dimensions formats.

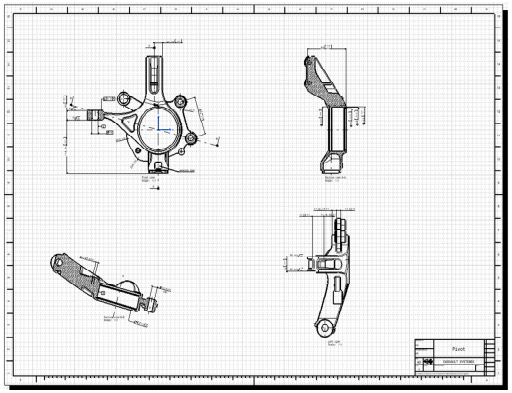

Student Notes:

Design Intent: The Pivot

- Creating a new company standard
- Creating Length/Distance Dimensions
- Creating Radius/Diameter Dimensions
- Adding Tolerances and Annotations

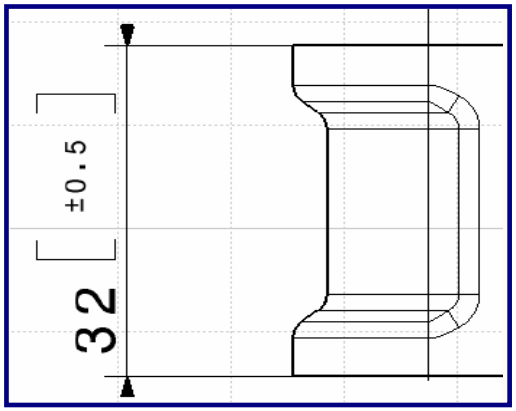

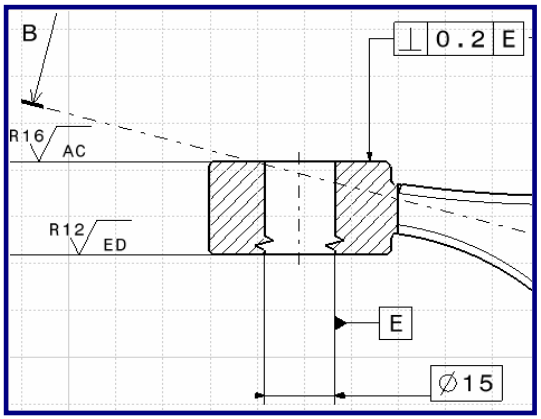

Student Notes:

Design Process: The Pivot

1 Customize ISO Standard and save it as "company standard"

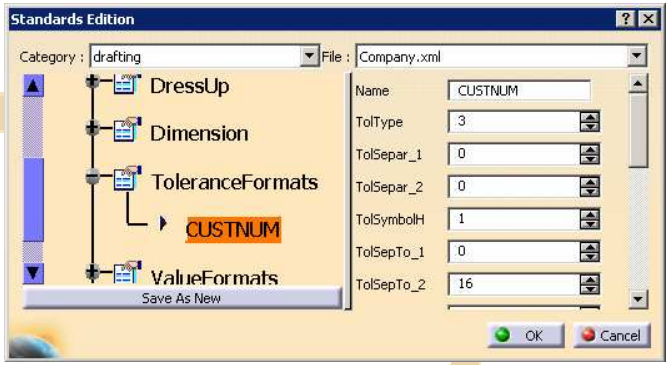

2 Create length dimensions with the new standard

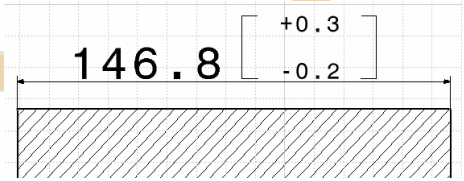

3 Create Radius dimensions with the new standard

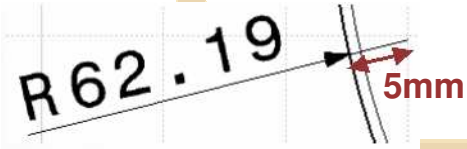

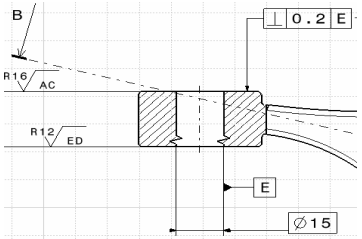

4 Add tolerances and annotations

Student Notes:

Do It Yourself (1/13)

Load: Pivot_Step0.CATDrawing

Customize ISO Standard and save it as “company standard”

- **Add a new style of Tolerance description called CUSTNUM with the following properties :**
  - Ratio between the height of the tolerance and the height of the dimension value must be 0.5
  - Ratio between the height of the symbol and the height of the dimension value must be 2
  - Anchor point on the dimension-value is the middle
  - Anchor point on the tolerance is the middle
  - Vertical distance between two tolerance values is 1mm (horizontal value is 0mm)
  - Vertical distance between the dimension value and the tolerance is 0.5mm (horizontal value is 0mm)
  - Display of the tolerance values trailing zeros has same behavior as for the dimension value
  - Display of the plus/minus symbol and the common value
  - Display of the tolerance value equal to zero with no sign
  - Display brackets as separators

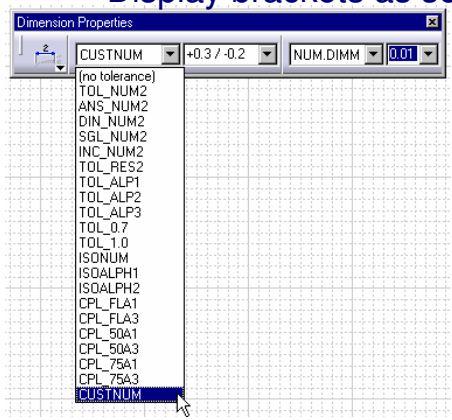

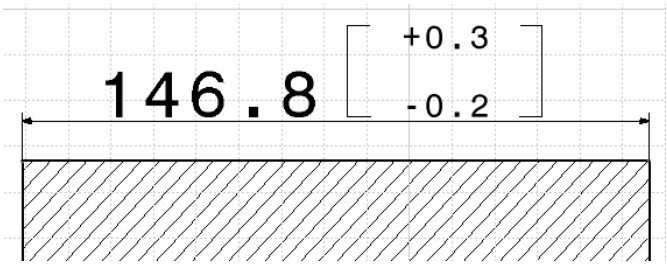

Student Notes:

Do It Yourself (2/13)

- **All length/distance dimensions must have the following standard :**
  - Dimension line symbol is a filled arrow
  - No blanking for extension lines
  - All the dimension values must be displayed using a point

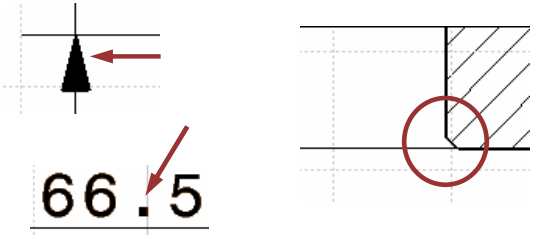

- **For framed values, the frame must not be aligned with dimension line**
  - Create a 1 mm offset

- **For dimensions with outside arrows, don't display dimension line outside the arrows**

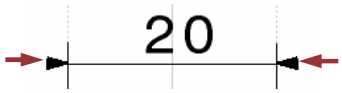

- **Modify the horizontal offsets for Texts before and Text after dimension value**

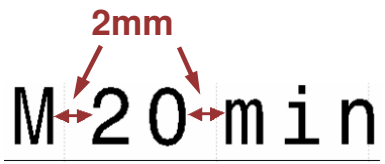

Student Notes:

Do It Yourself (3/13)

- **All radius/diameter dimensions must have the following standard :**
  - Dimension line symbol is a filled arrow
  - No blanking for extension lines
  - All the dimension values must be displayed using a point
  - Value inside circle: no overrun length for dimension line
  - Value outside circle: 5mm overrun length for dimension line
  - For Half dimensions, no overrun length for dimension line

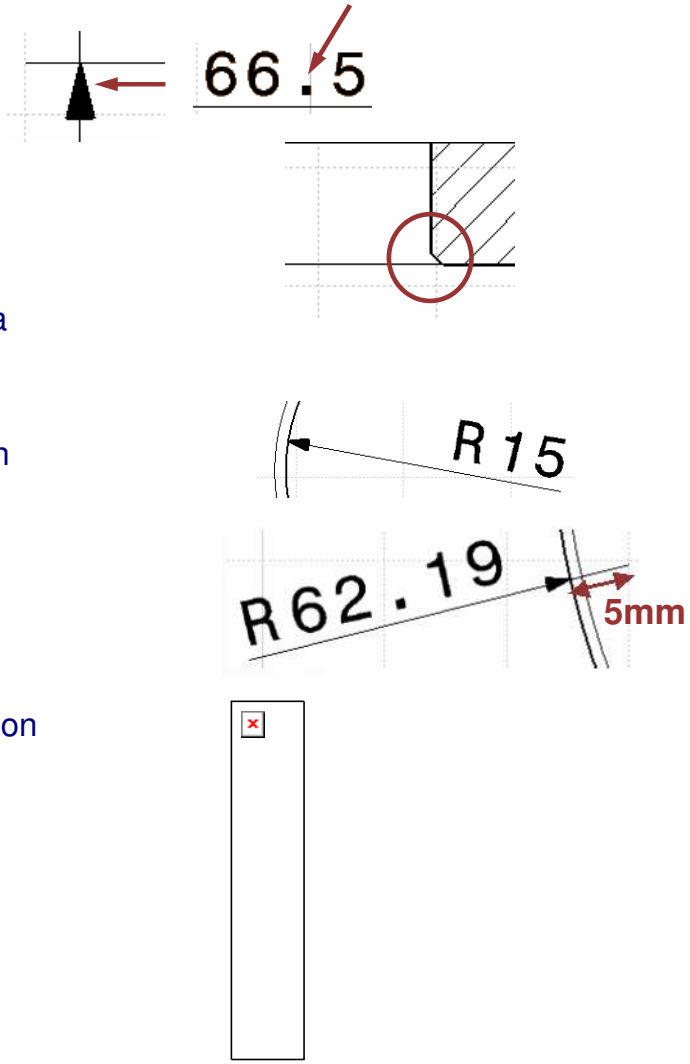

Student Notes:

Do It Yourself (4/13)

- **Tolerances & annotations must have following standard :**
  - All the tolerance values must be displayed using a point as decimal separator
  - Datum symbol shape: filled triangle
  - Tolerance symbol arrow: filled arrow
  - Roughness symbol font size: 2.5mm

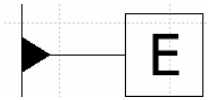

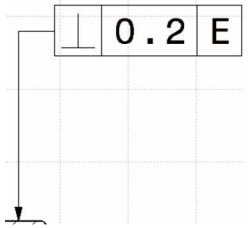

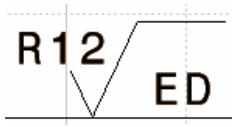

EXERCISE BOOK

Student Notes:

Do It Yourself (5/13)

Create Length dimensions

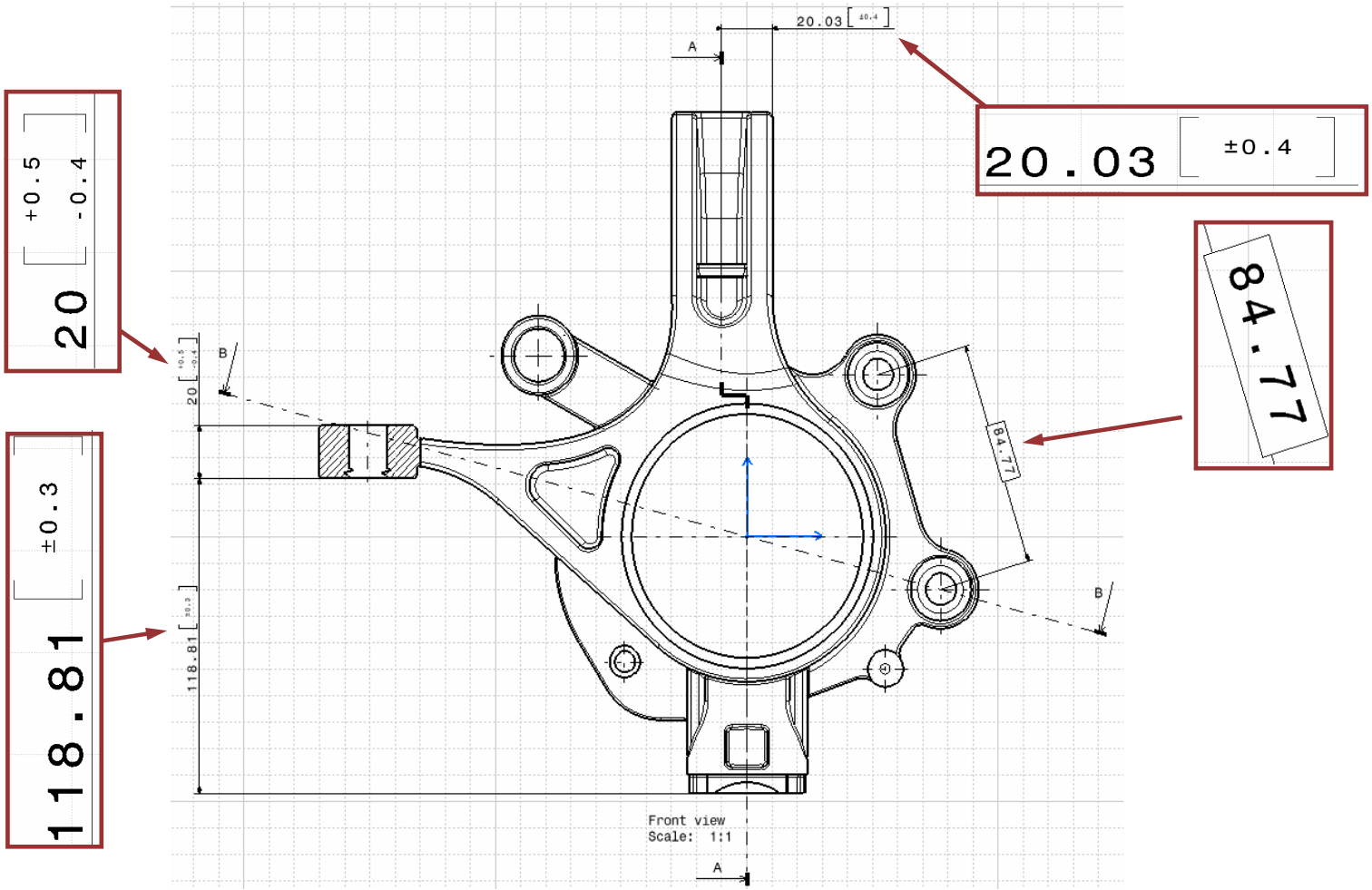

Reference Available : Pivot_Step1.CATDrawing

EXERCISE BOOK

Student Notes:

Do It Yourself (6/13)

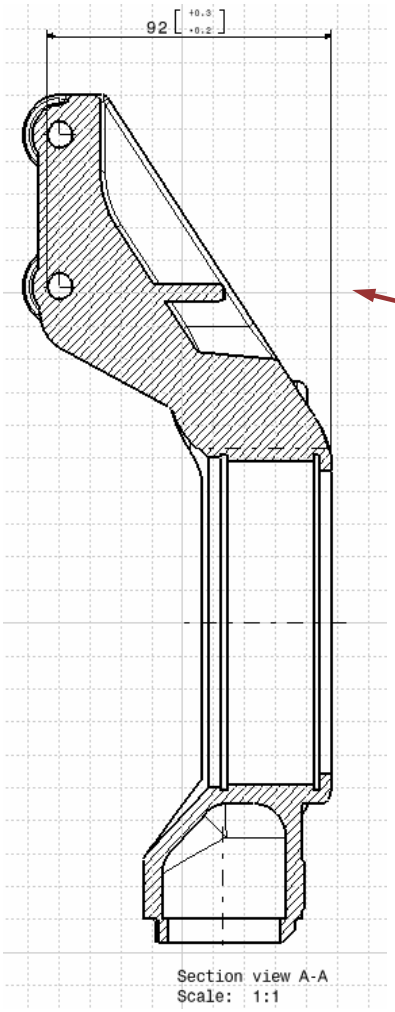

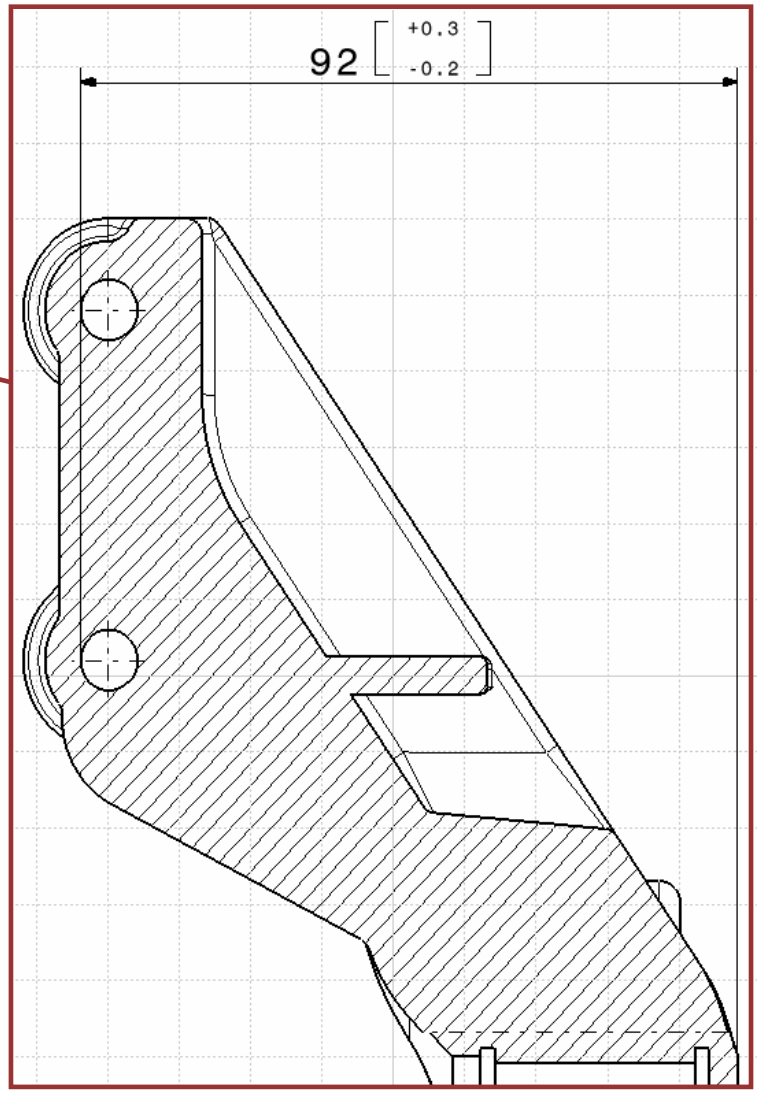

Reference Available : Pivot_Step1.CATDrawing

Student Notes:

Do It Yourself (7/13)

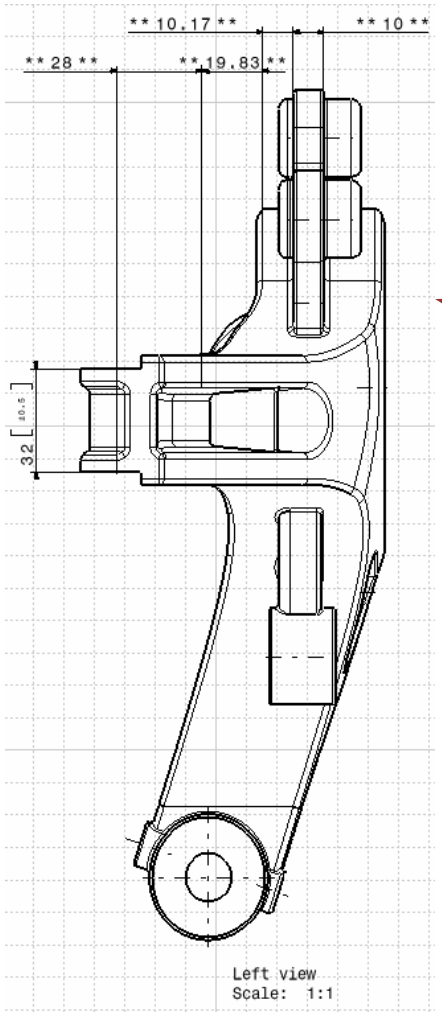

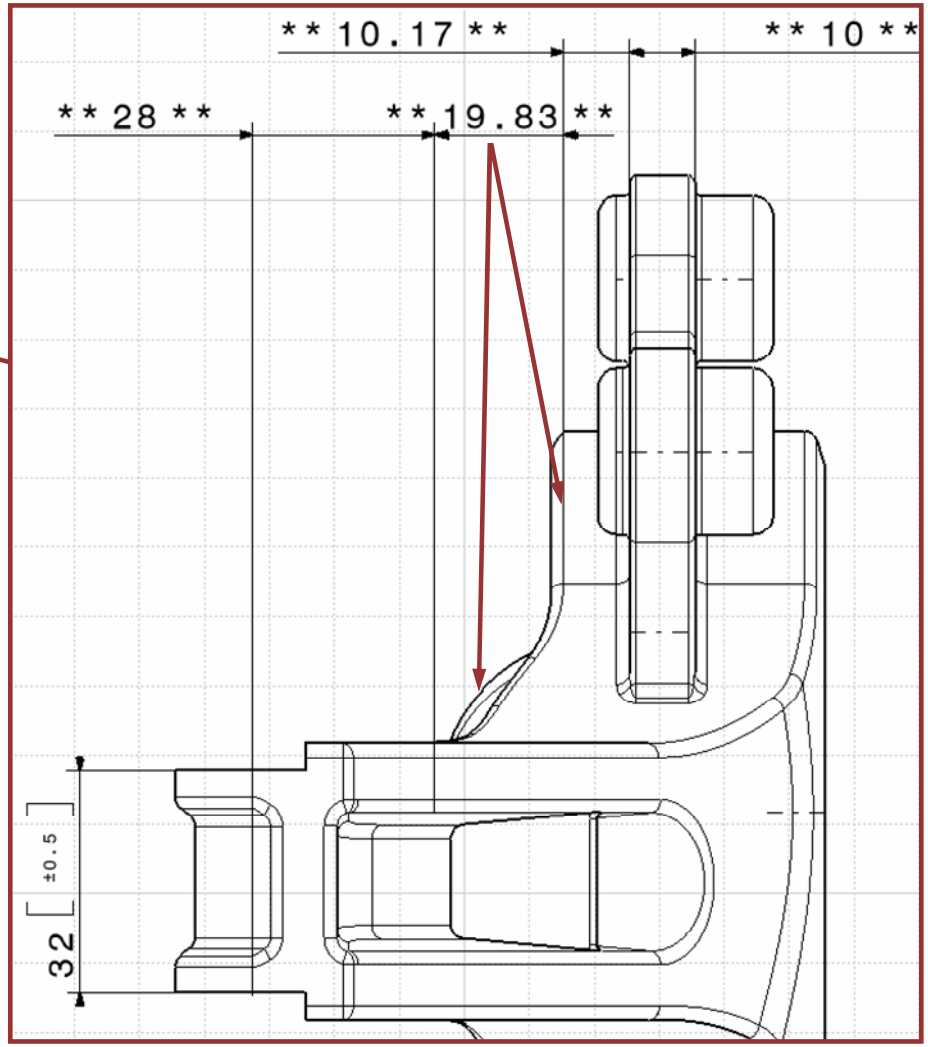

Reference Available : Pivot_Step1.CATDrawing

EXERCISE BOOK

Student Notes:

Do It Yourself (8/13)

Create Radius/Diameter dimensions

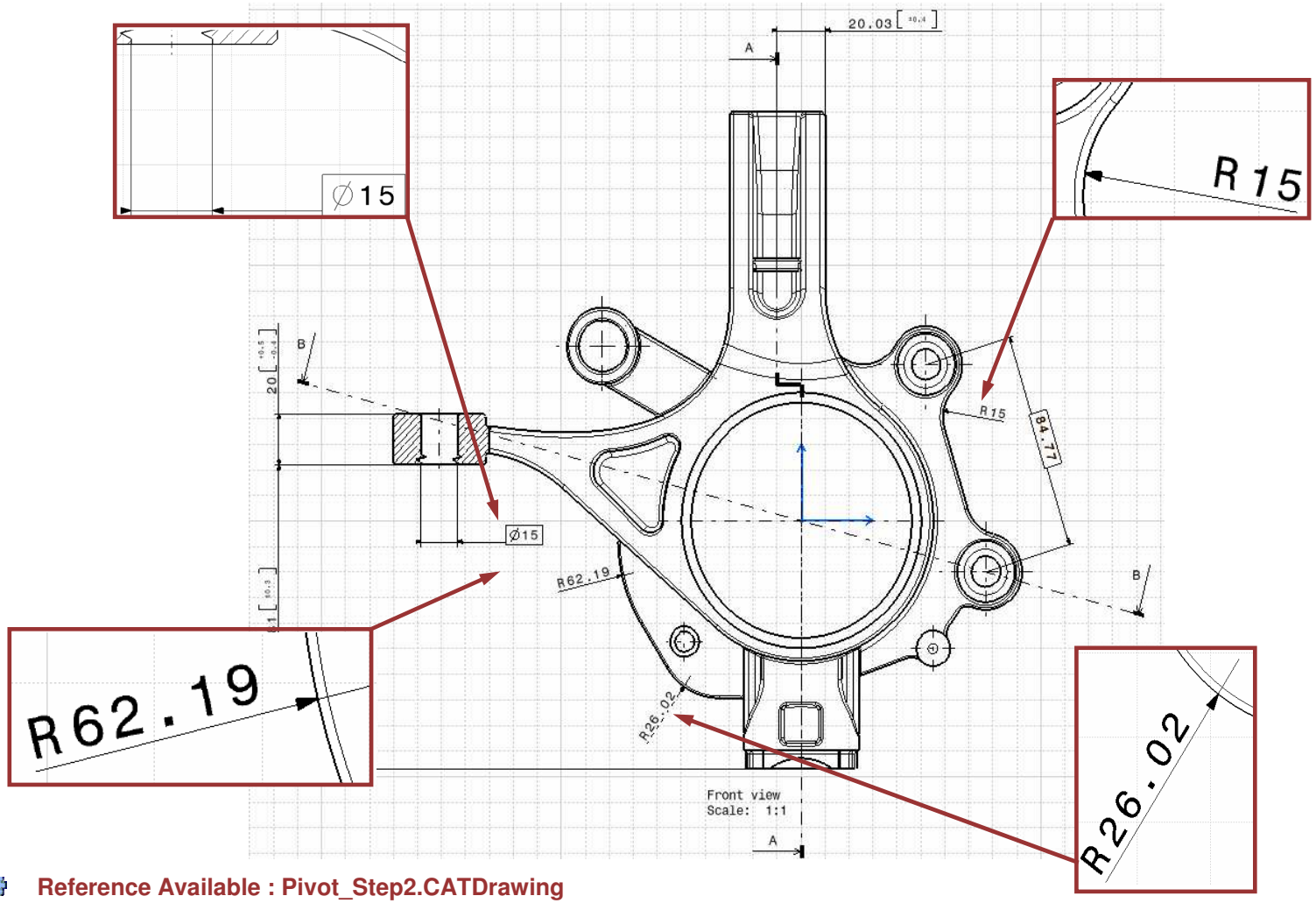

Reference Available : Pivot_Step2.CATDrawing

EXERCISE BOOK

Student Notes:

Do It Yourself (9/13)

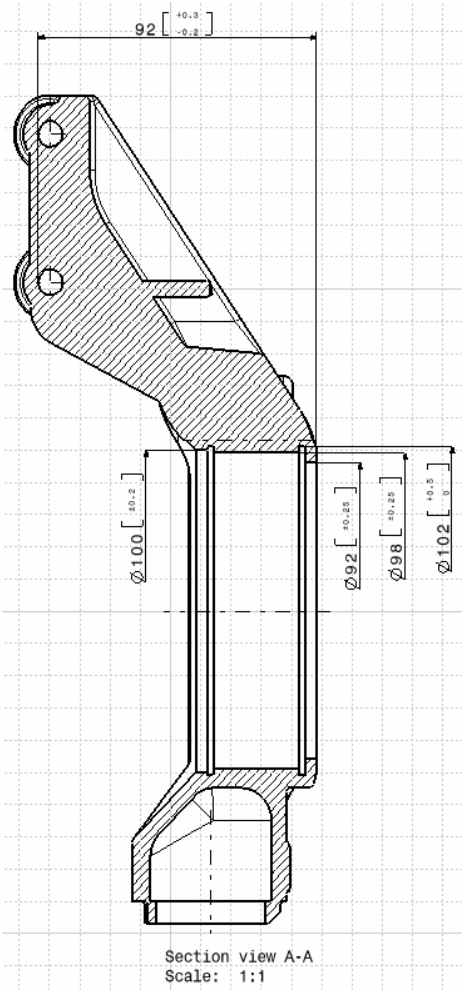

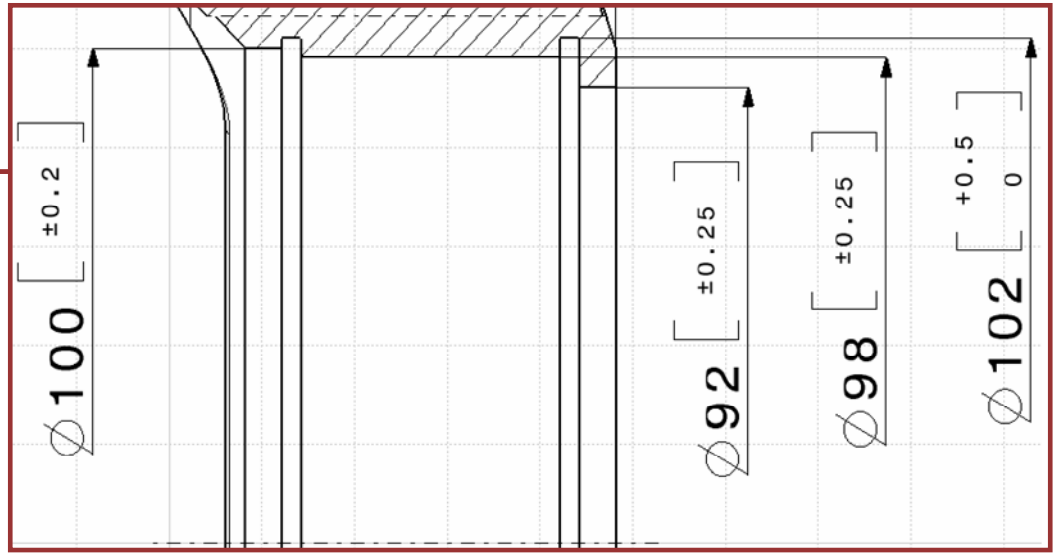

Reference Available : Pivot_Step2.CATDrawing

Student Notes:

Do It Yourself (10/13)

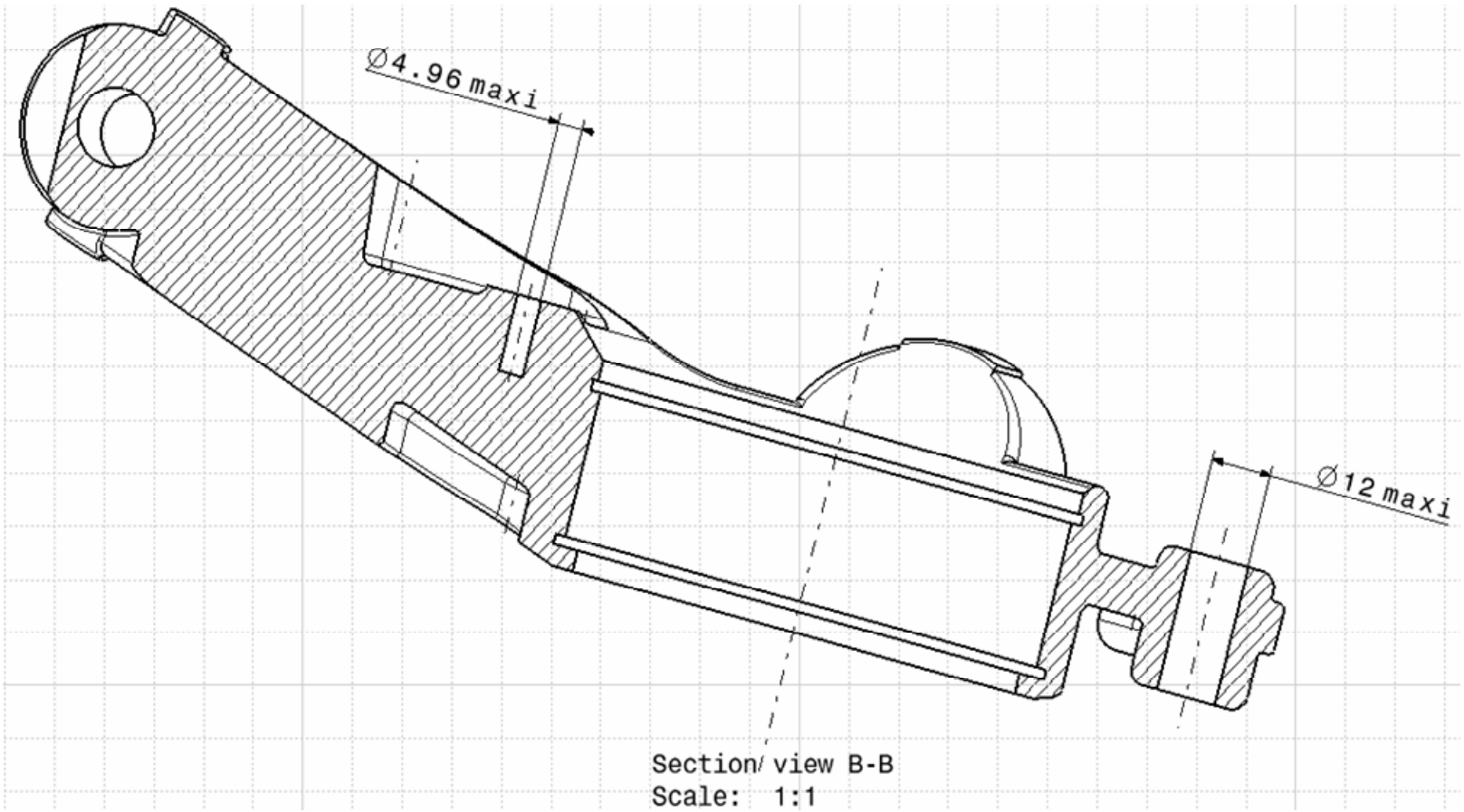

Reference Available : Pivot_Step2.CATDrawing

EXERCISE BOOK

Student Notes:

Do It Yourself (11/13)

Add Tolerances & Annotations

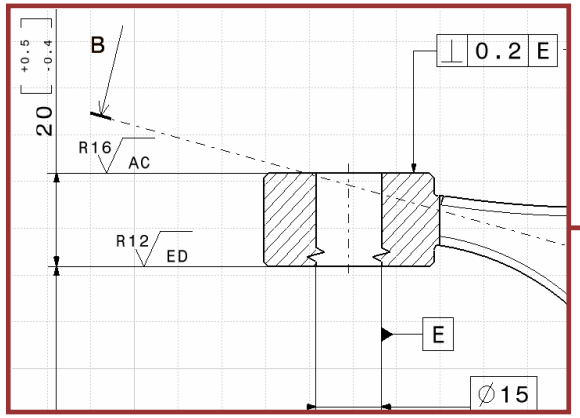

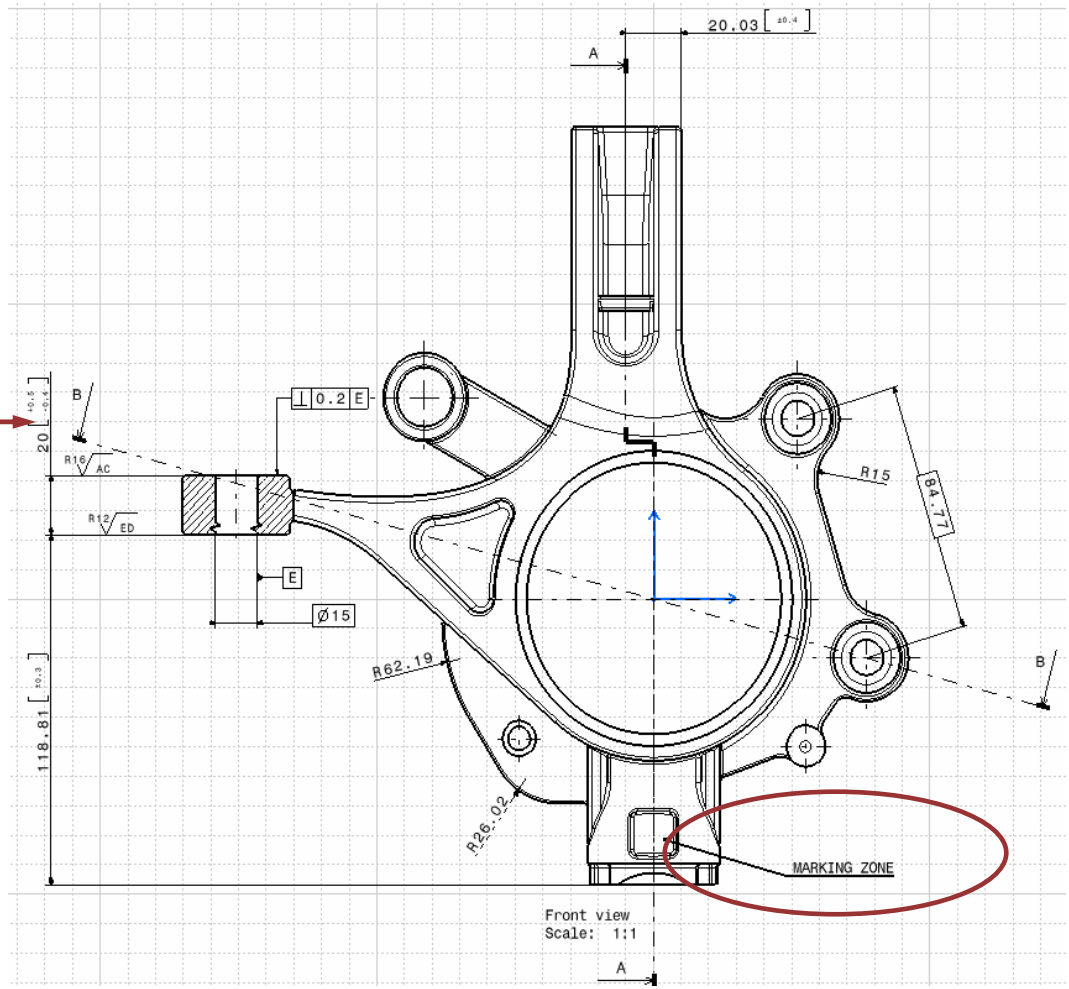

Reference Available : Pivot_Step3.CATDrawing

EXERCISE BOOK

Student Notes:

Do It Yourself (12/13)

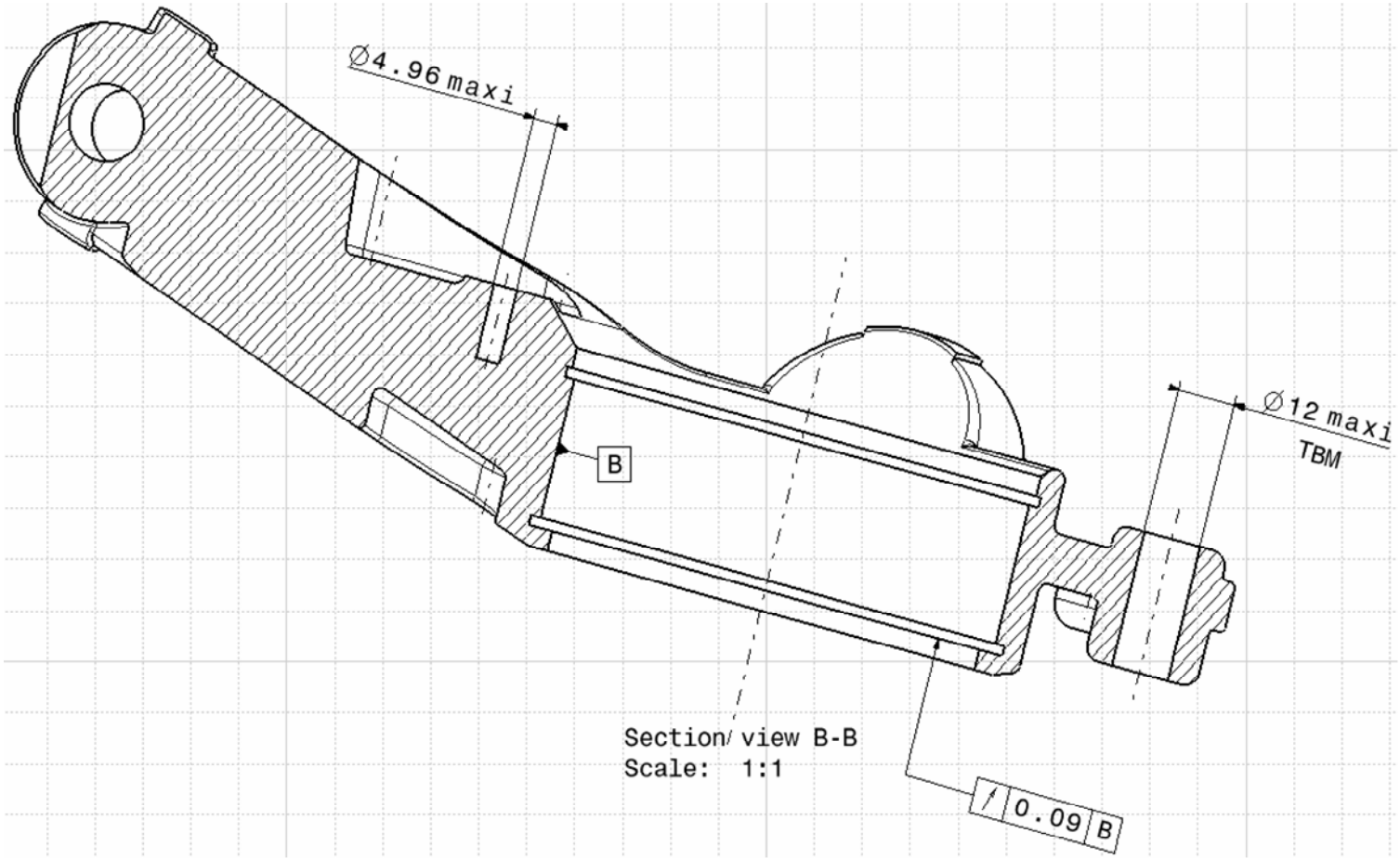

Reference Available : Pivot_Step3.CATDrawing

Student Notes:

Do It Yourself (13/13)

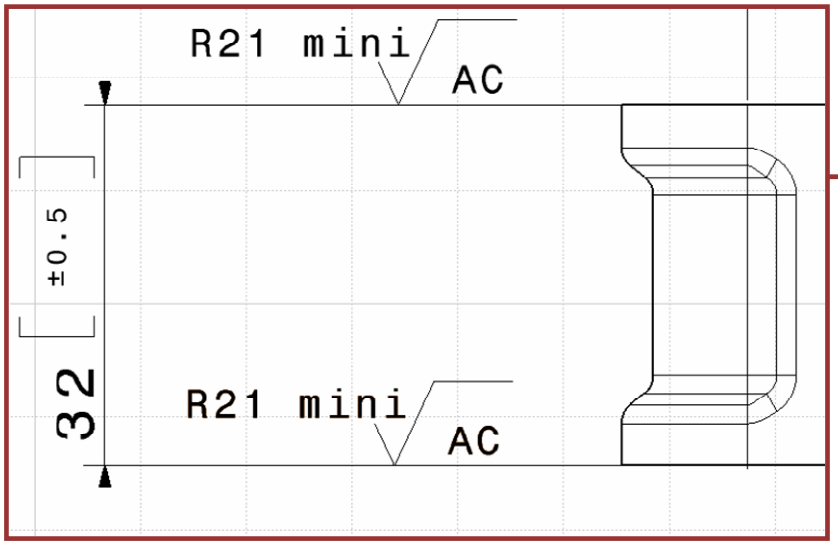

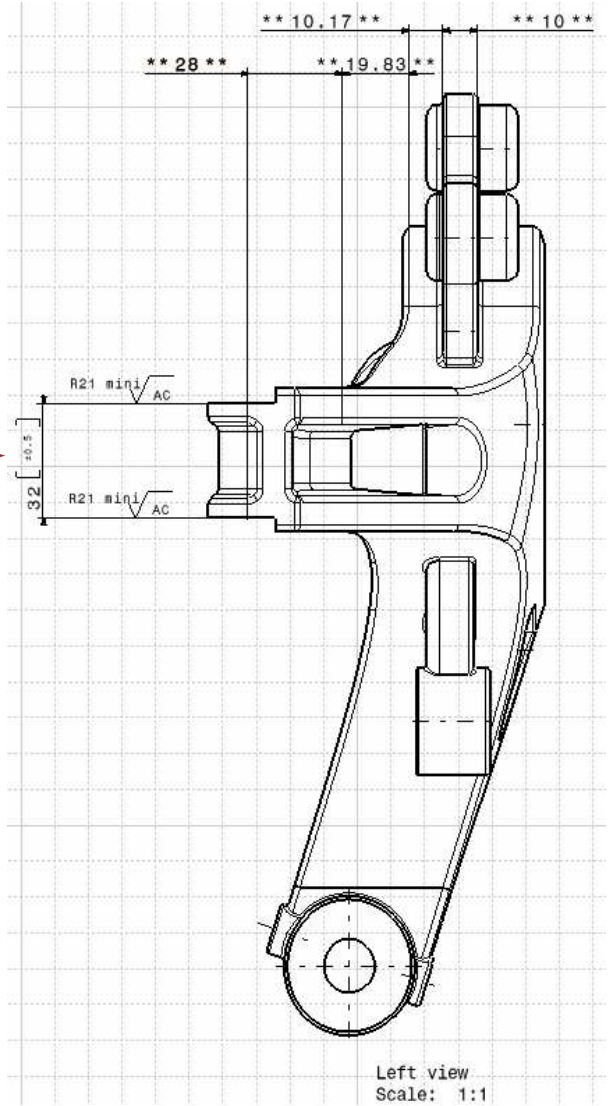

Reference Available : Pivot_Step3.CATDrawing

Student Notes:

Exercise - Generating dimensions

25 min

In this exercise you will generate views from the 3D and you will generate dimensions.

You will need to use filters or several options to improve the clearness of your drawing.

The aim of this exercise is to learn how generate dimensions properly and how to have information on the generated dimensions in relation to the existing constraints in the 3D.

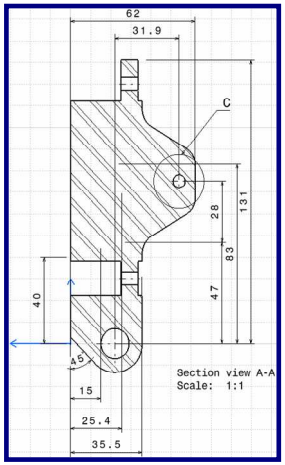

Student Notes:

Design Intent: Generating dimensions

- Creating several views
- Generating and managing dimensions
- Auto positioning generated dimensions
- Analyzing dimensions position

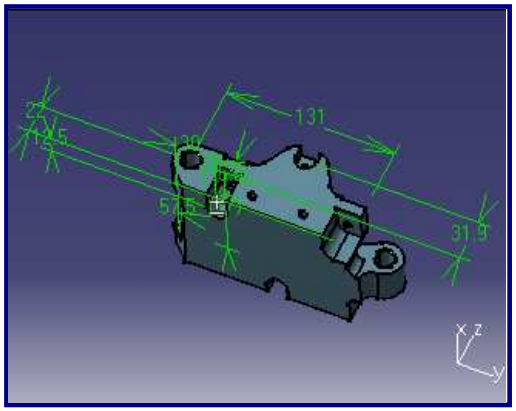

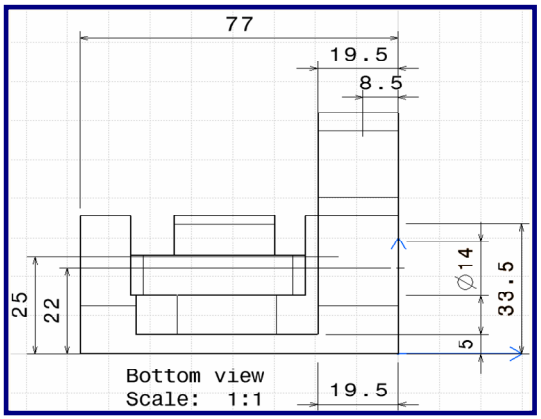

Student Notes:

Design Process: Generating dimensions

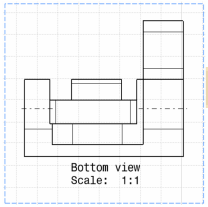

1 Creating views, section views, section cut.

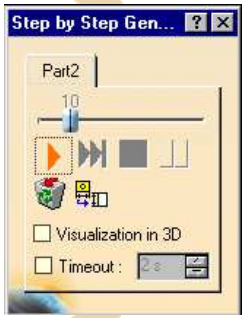

2 Generating and managing dimensions by using filters and transfer of views.

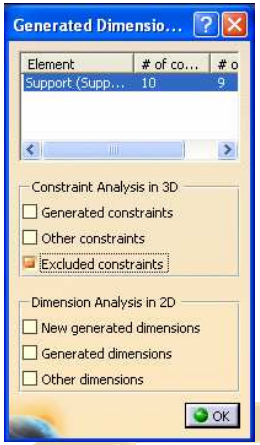

3 Analyzing generated dimensions.

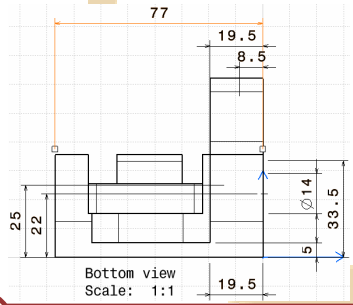

4 Transferring dimensions and Auto positioning generated dimensions.

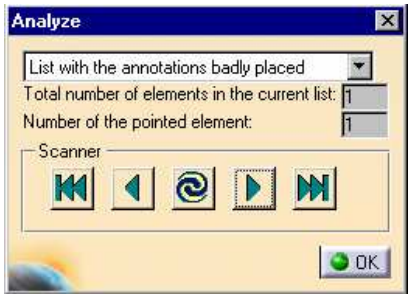

5 Analyzing dimensions position.

Student Notes:

Do It Yourself (1/8)

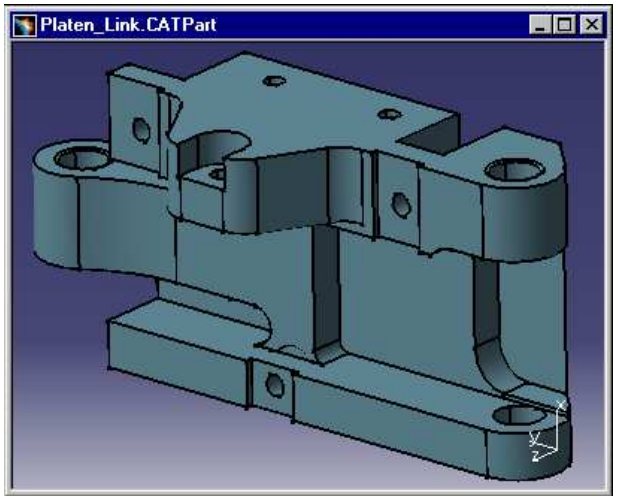

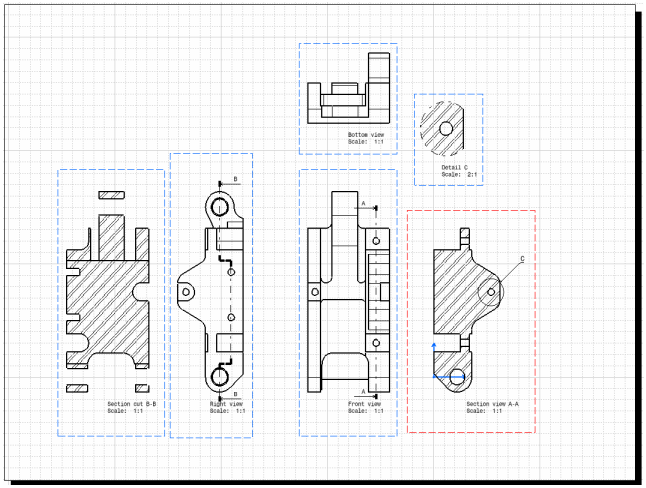

Details of the drawing next page

- Generate automatically Front, Bottom and Right views in an A2 ISO format drawing.
- Add a section view and a section cut.
- Create a detail view.

Load: Platen_Link.CATPart

Student Notes:

Do It Yourself (2/8)

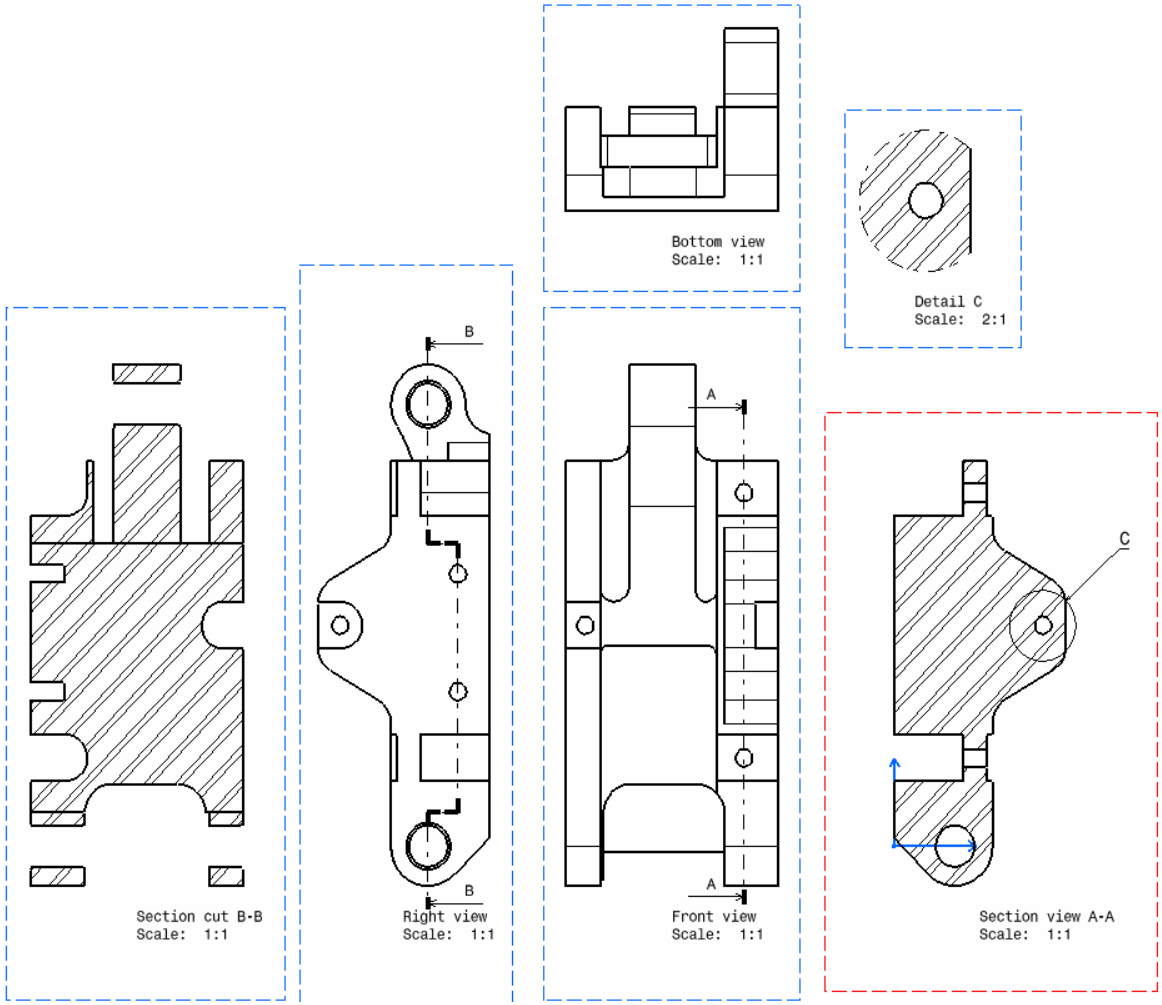

Reference Available : Platen_Link_Step1.CATDrawing

Student Notes:

Do It Yourself (3/8)

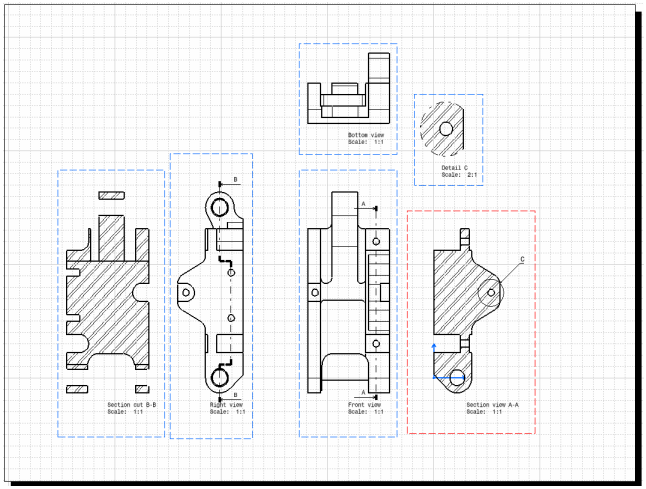

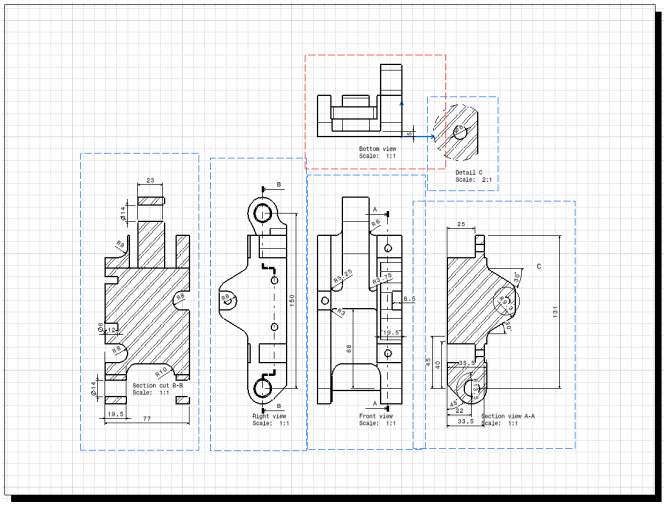

Details of the drawing next page

- **First generate automatically dimensions without selecting any options.**
- **Then use Dimensions Generation Filters techniques and generate all dimensions step by step (do not use 3D visualization and timeout option).**
- **Transfer and delete some dimensions.**
- **Show the new generated dimensions in the drawing and in the 3D.**

EXERCISE BOOK

Student Notes:

Do It Yourself (4/8)

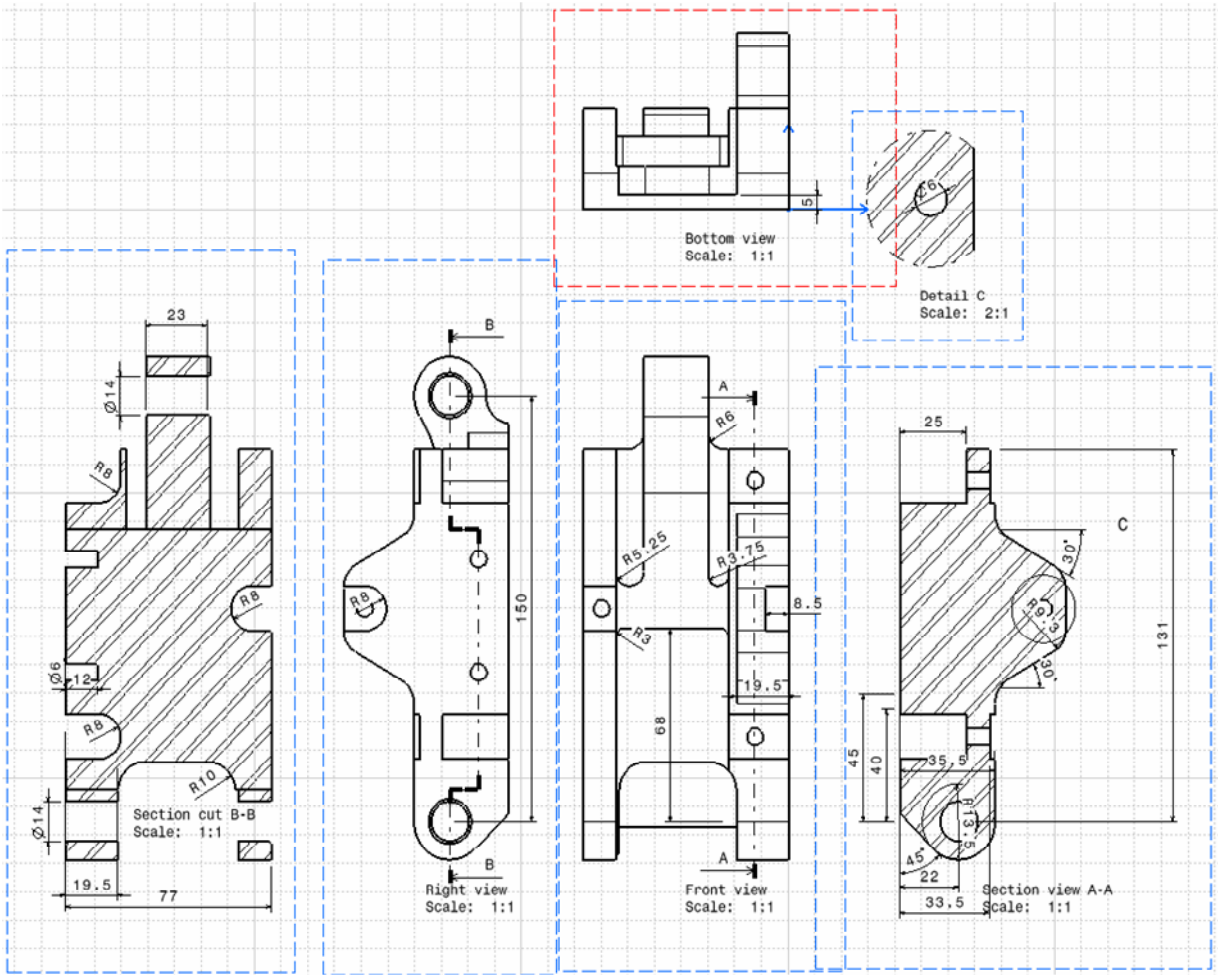

Reference Available : Platen_Link_Step2.CATDrawing

Student Notes:

Do It Yourself (5/8)

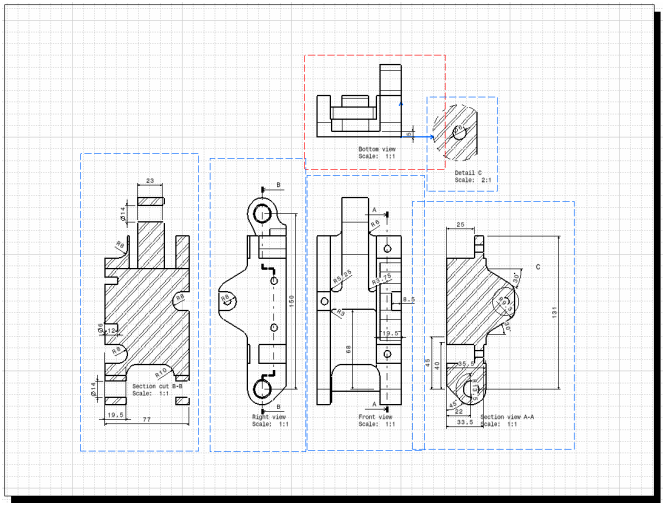

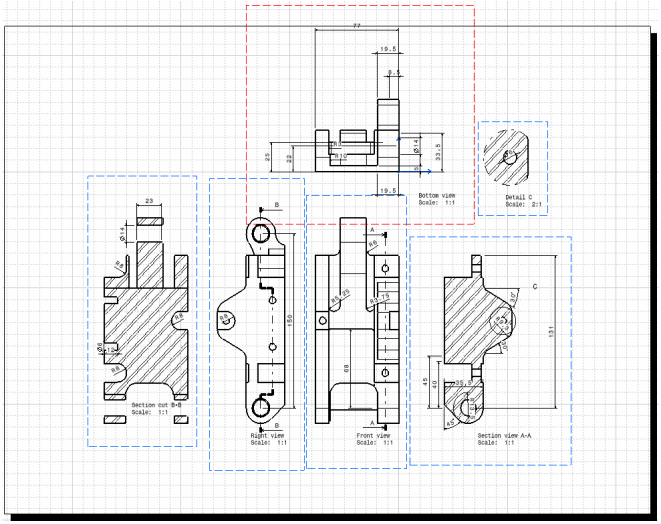

Details of the drawing next page

- **Transfer all possible dimensions in the Bottom view**
- **Auto-position the dimensions in the Bottom view**

EXERCISE BOOK

Student Notes:

Do It Yourself (6/8)

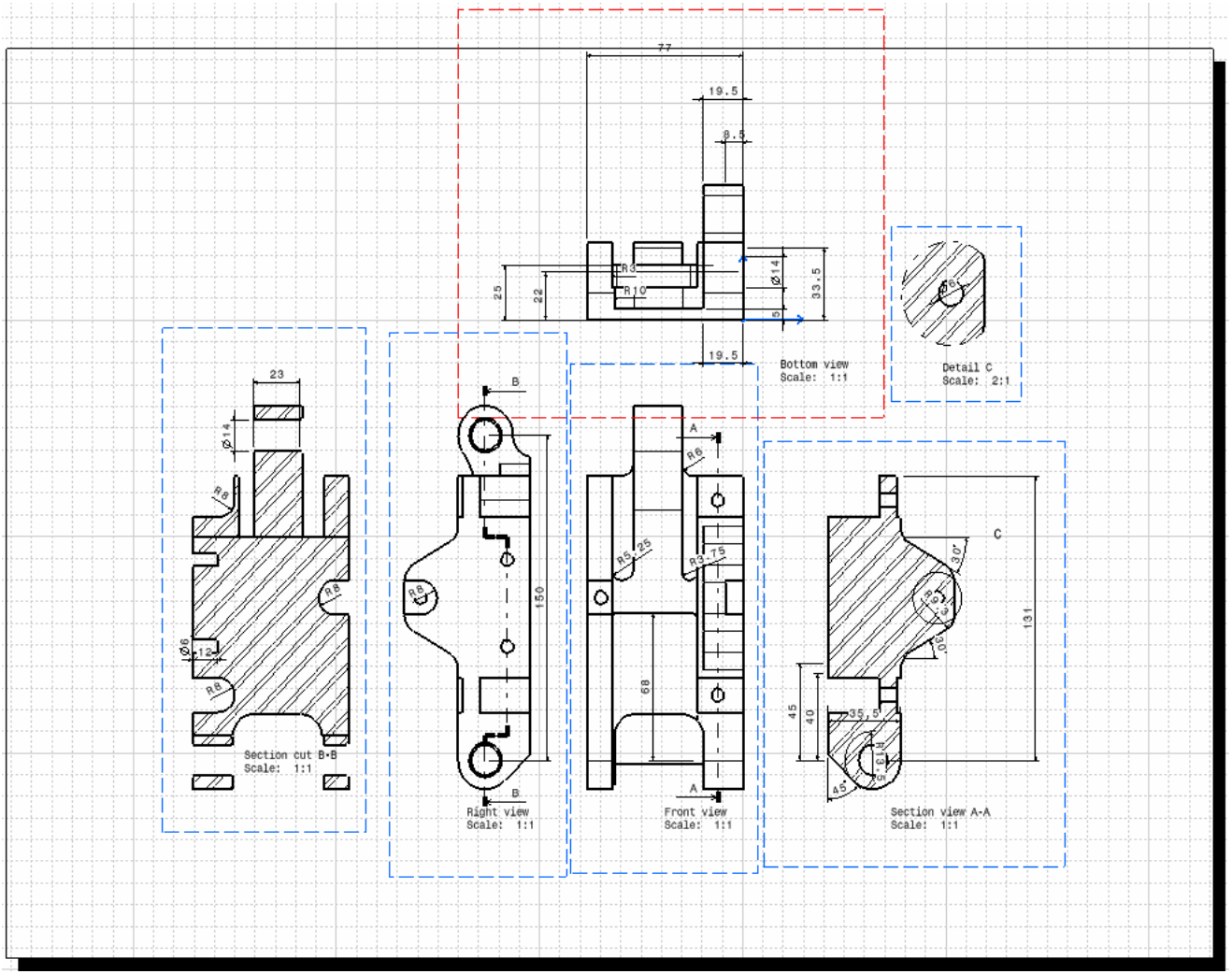

Reference Available : Platen_Link_Step3.CATDrawing

Student Notes:

Do It Yourself (7/8)

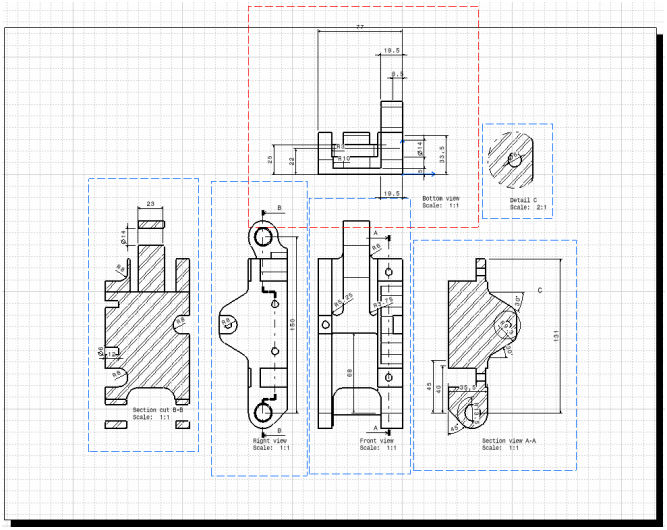

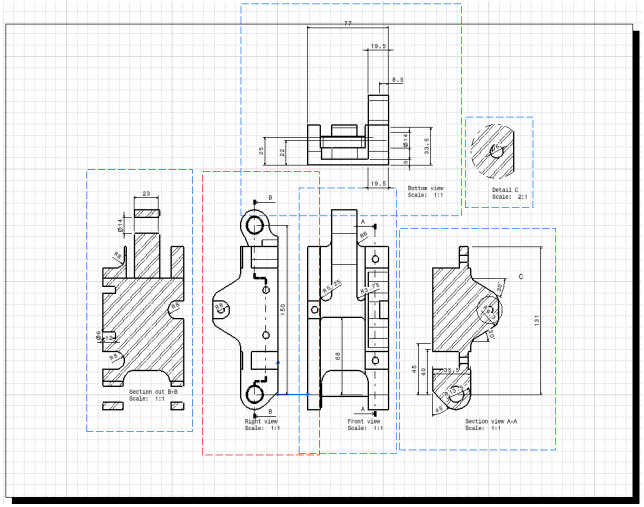

Details of the drawing next page

- **Select different views and make a dimensions analysis to place correctly the dimensions.**

EXERCISE BOOK

Student Notes:

Do It Yourself (8/8)

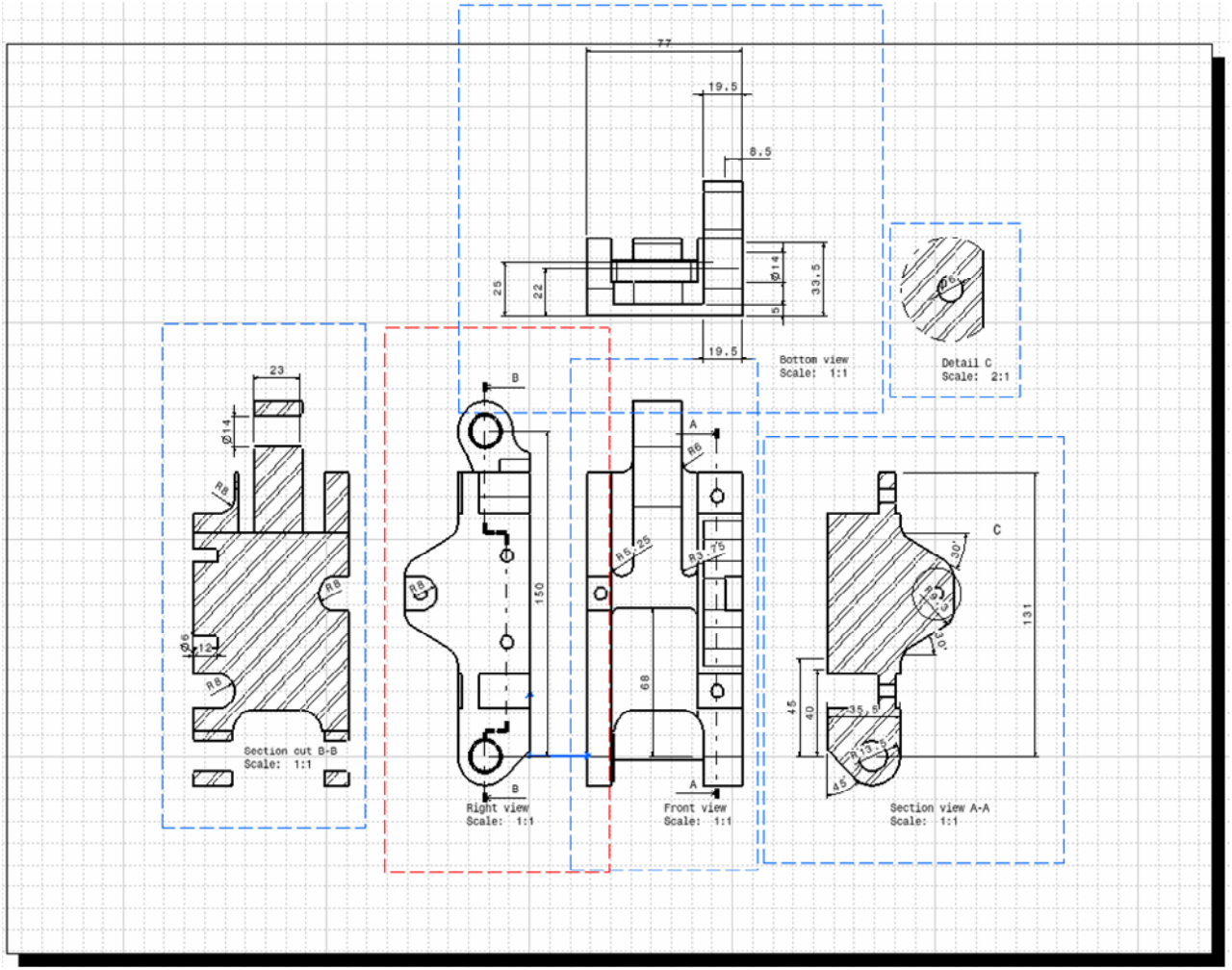

Reference Available : Platen_Link_Step4.CATDrawing

Student Notes:

Exercise - Using filtering techniques

25 min

In this exercise you will have the opportunity to use the different filtering techniques to generate an assembly drawing.

You will use filters on the 3D assembly to apply some specifications at the view generation and also filters on the generated views.

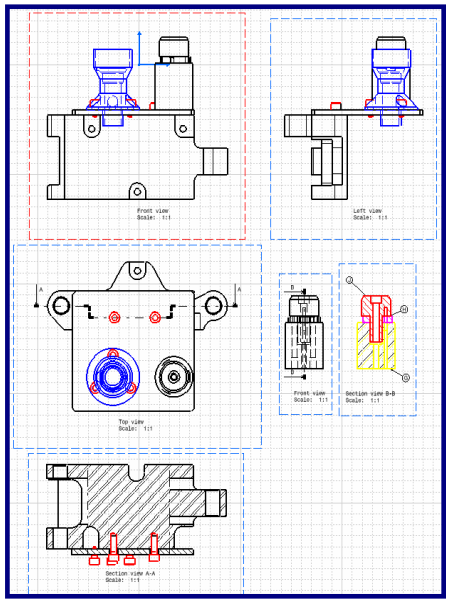

Student Notes:

Design Intent: Using Filtering Techniques

- Generating Front, Top & Left views with specifications
- Creating a Section view with specifications
- Using different filters on the generated views
- Generating a Front view of several parts
- Using filters and generating balloons

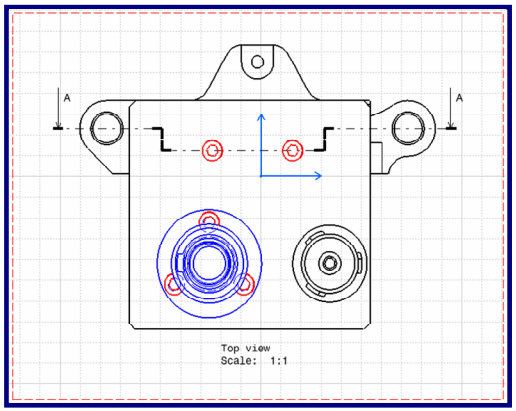

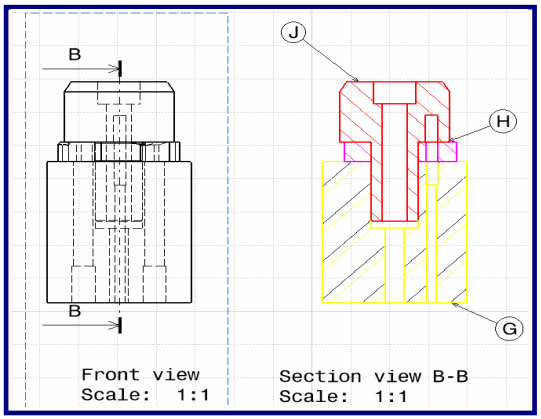

Student Notes:

Design Process: Using Filtering Techniques

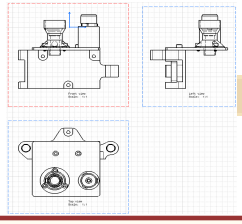

1 Generating Front, Top & Left views with specifications.

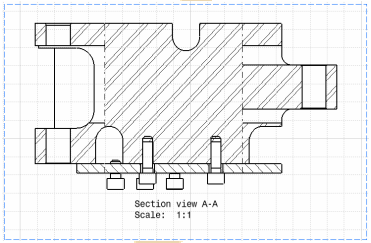

2 Creating a Section view with specifications.

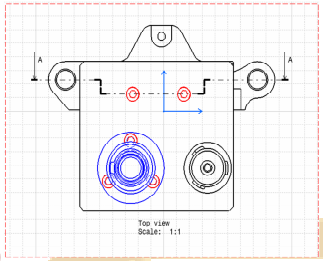

3 Using different filters on the generated views.

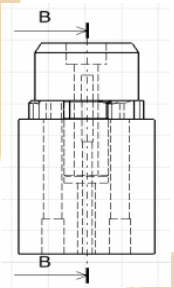

4 Generating a Front view of several parts.

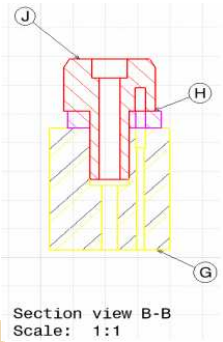

5 Using filters and generating balloons.

Student Notes:

Do It Yourself (1/8)

Load: MA6276TFGA2.CATProduct

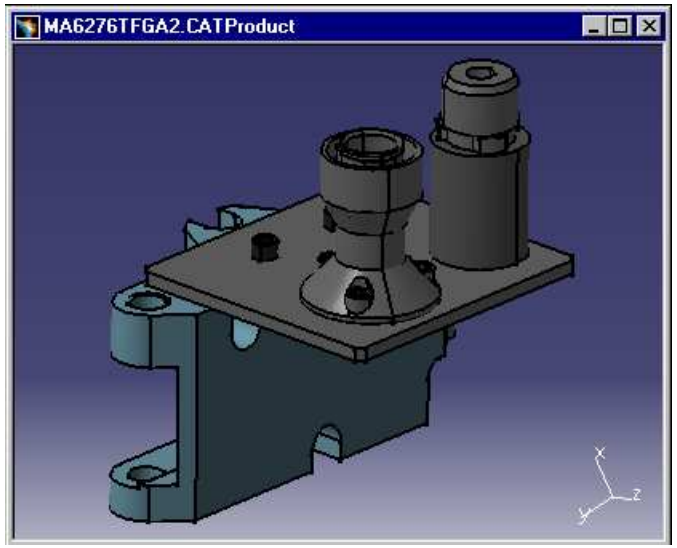

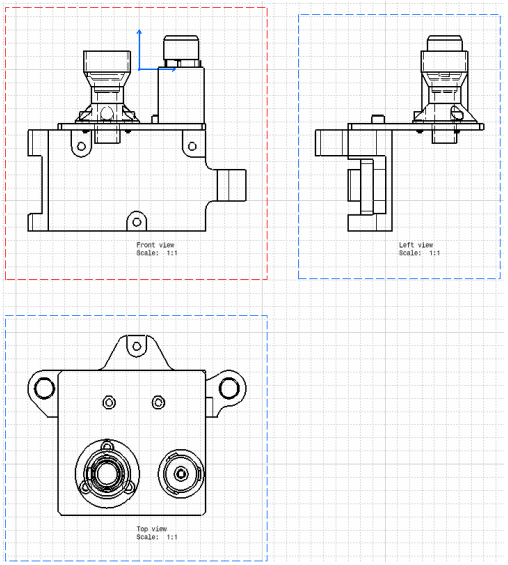

Details of the drawing next page

- Generate Front, Top & Left views automatically with the following specifications :
  - Do not display the Male_Shaft.CATPart
  - Show hidden lines of the Support.CATPart

Do It Yourself (2/8)

Student Notes:

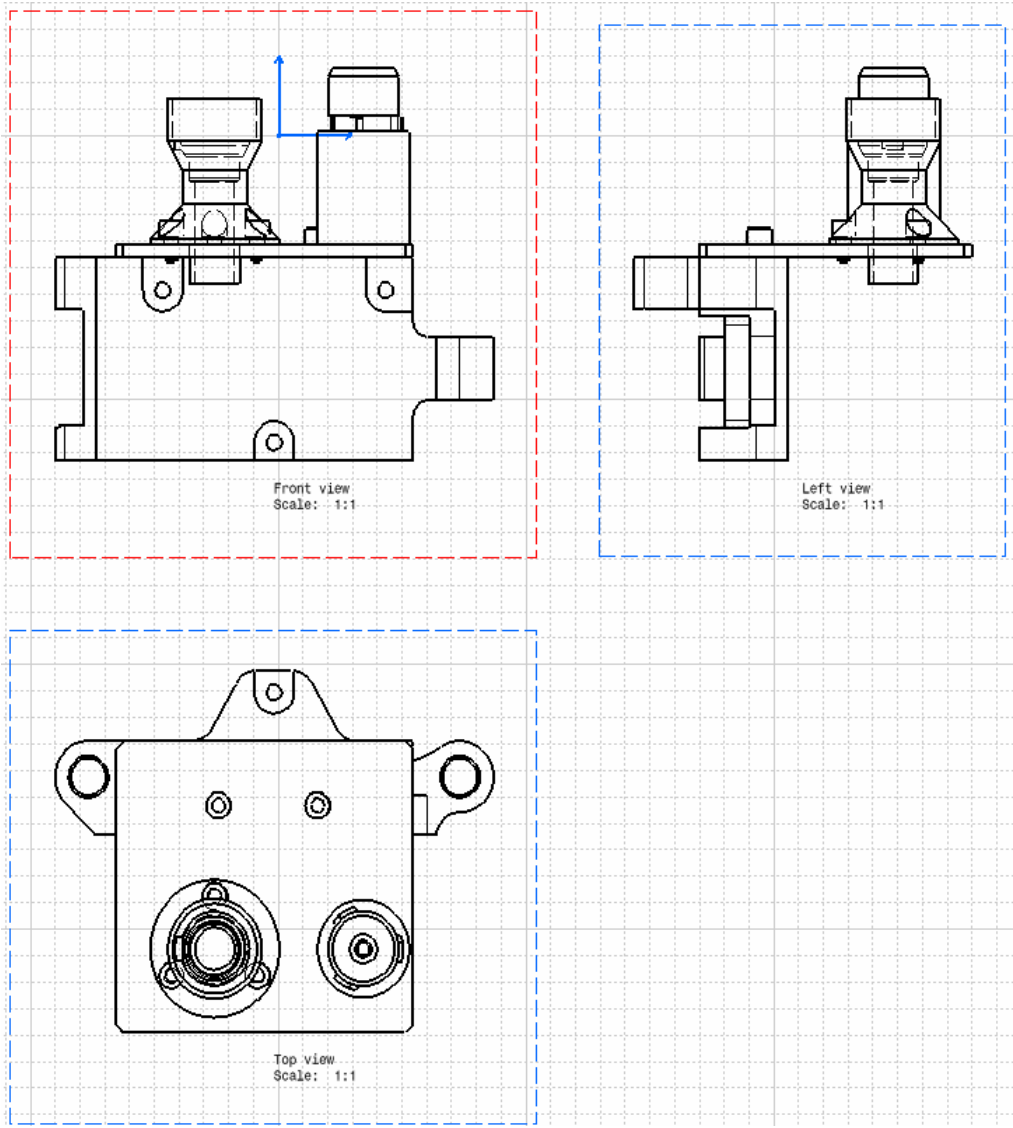

Reference Available : MA6276TFGA2_Step1.CATDrawing

Student Notes:

Do It Yourself (3/8)

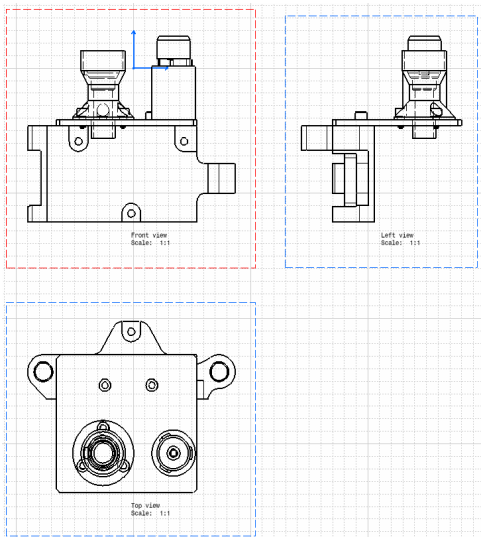

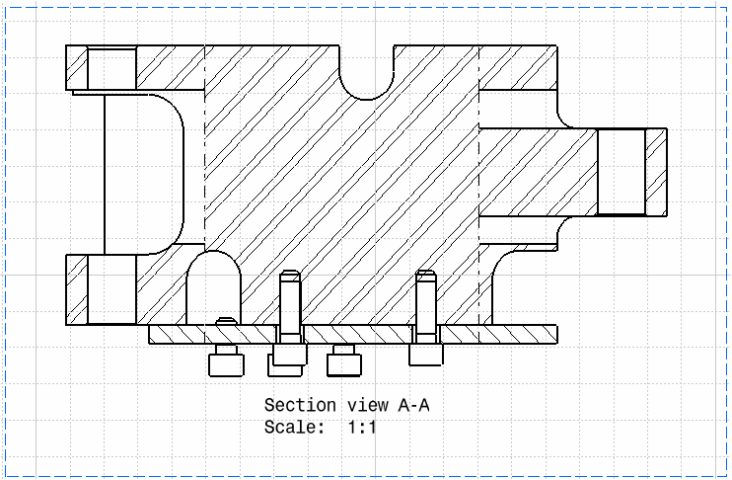

Details of the drawing next page

- **Create a section view going through the screws with the following specifications :**
  - **Do not cut screws**
  - **Remove Support.CATPart, MA6276TF-005.CATPart, MA6276-006.CATPart & MA6276-007.CATPart**

EXERCISE BOOK

Student Notes:

Do It Yourself (4/8)

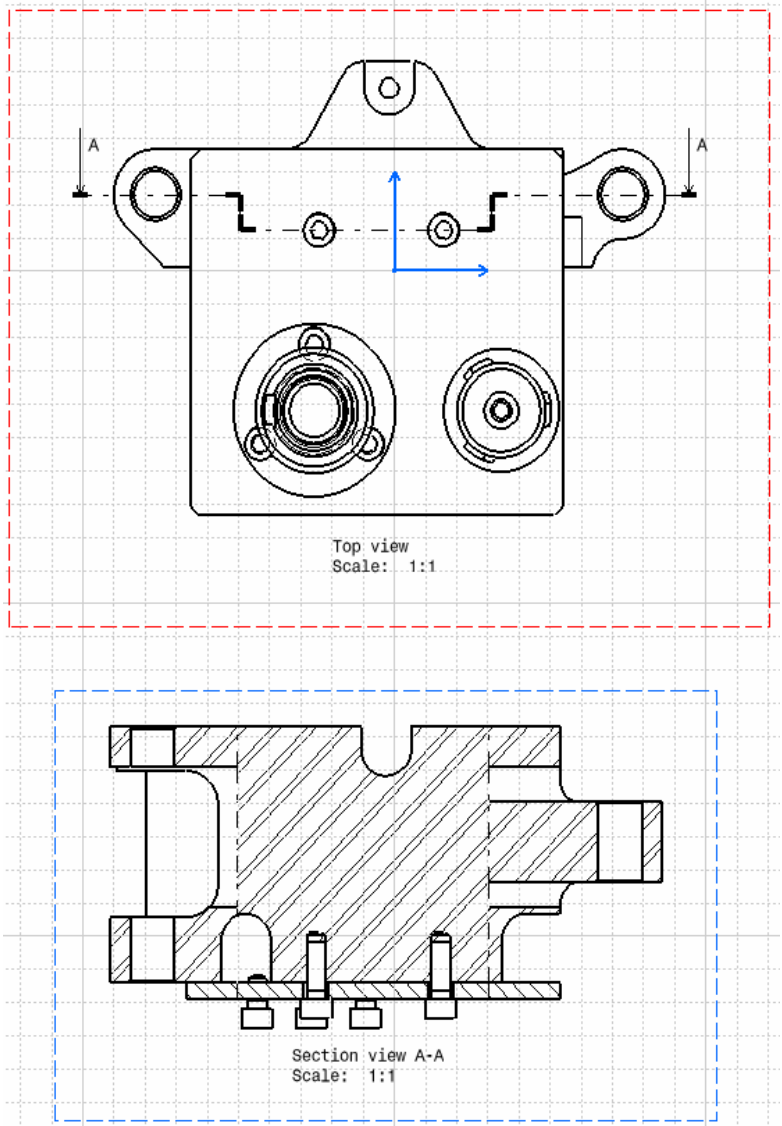

Reference Available : MA6276TFGA2_Step2.CATDrawing

Student Notes:

Do It Yourself (5/8)

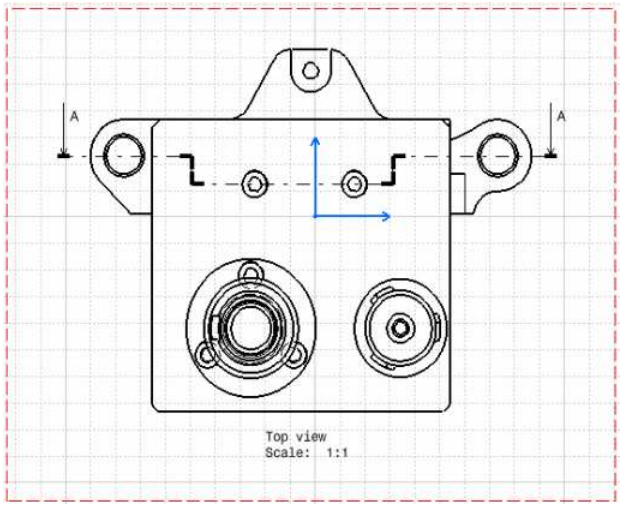

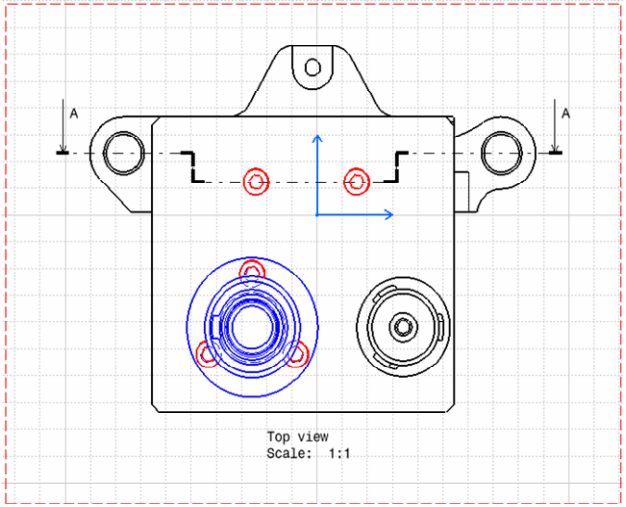

Details of the drawing next page

- **Set specific colors :**
  - **Display in red all the screws**
  - **Display in blue the Support part**

Student Notes:

Do It Yourself (6/8)

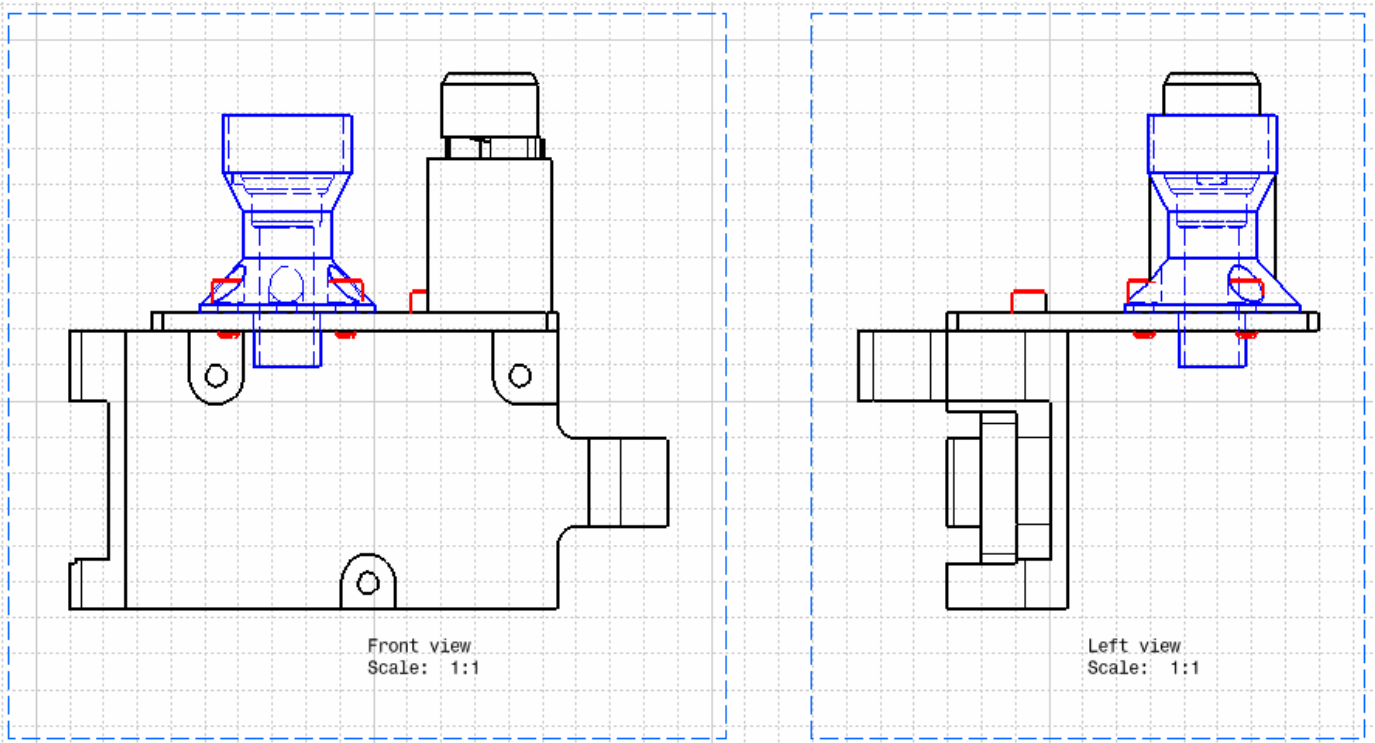

Reference Available : MA6276TFGA2_Step3.CATDrawing

Student Notes:

Do It Yourself (7/8)

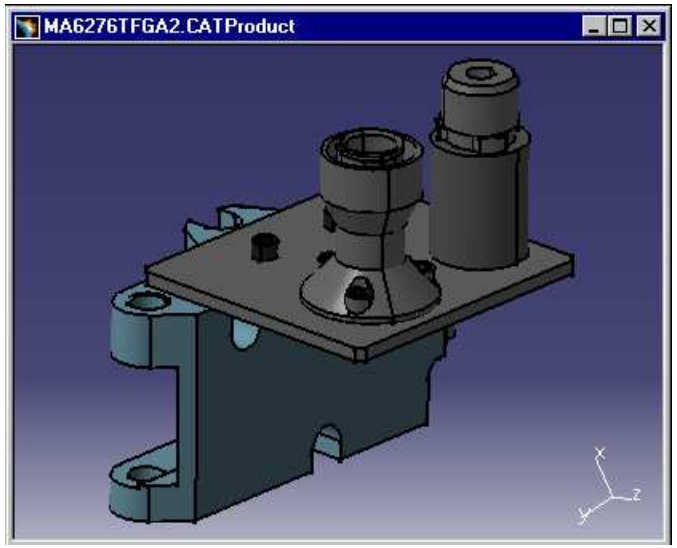

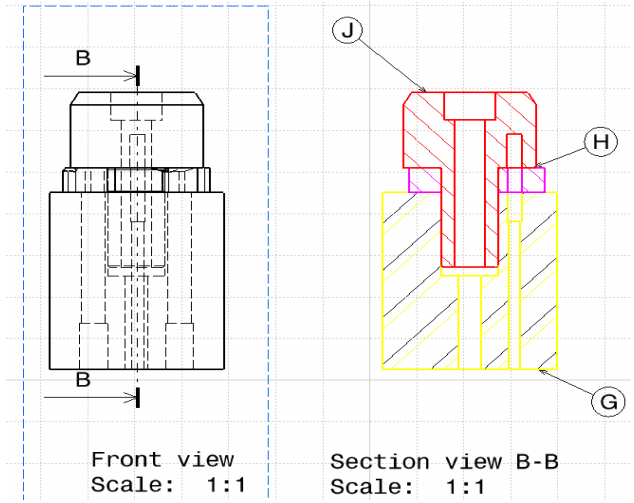

Details of the drawing next page

- Generate a Front view of MA6276TF-005.CATPart, MA6276TF-006.CATpart & MA6276TF-007.CATPart with the following specifications :
  - Show hidden lines
- Generate a section view with the following specifications :
  - Display the MA6276TF-005.CATPart in red
  - Display the MA6276TF-006.CATPart in pink
  - Display the MA6276TF-007.CATPart in yellow
- Generate balloons on the section view “B-B”

Student Notes:

Do It Yourself (8/8)

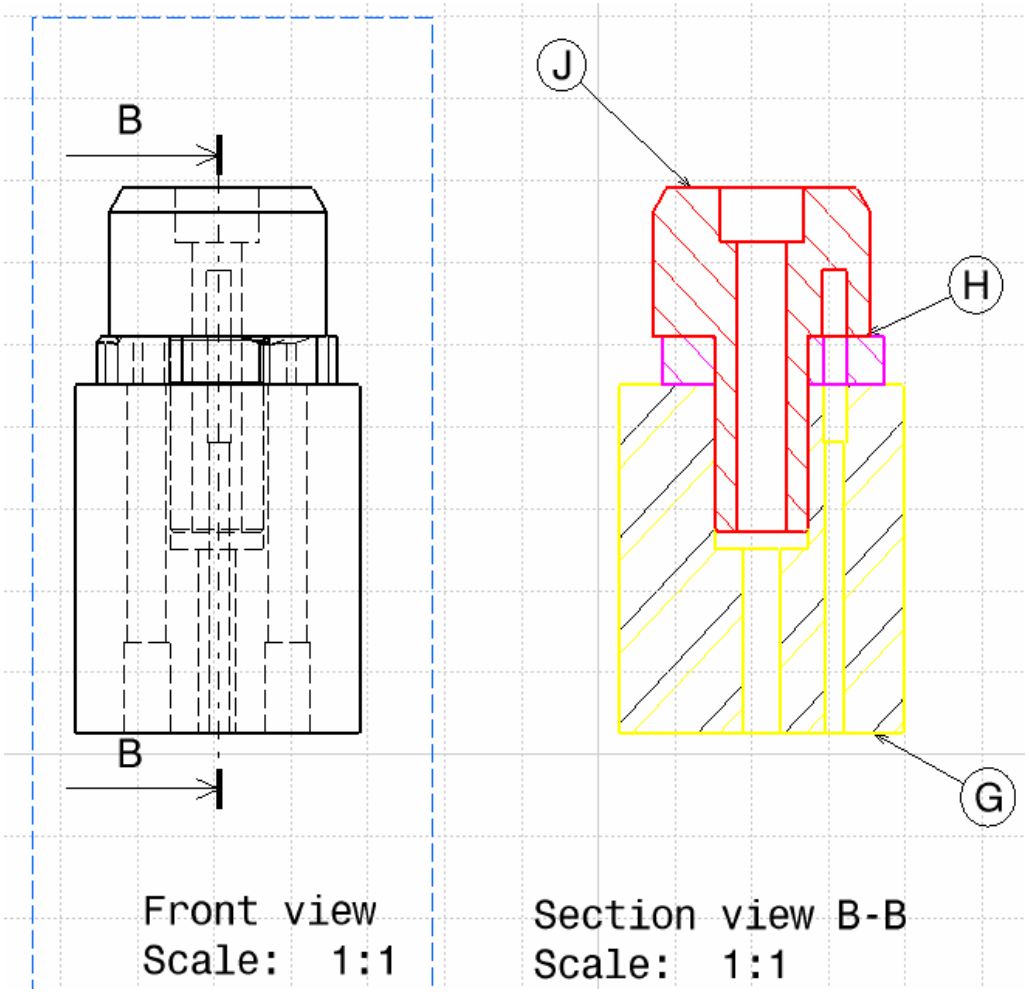

Reference Available : MA6276TFGA2_Step4.CATDrawing

Student Notes:

Exercise - Geometry & Free Text in VBScript

15 min

In this exercise you will have to add a subroutine to the macro which generates the Title Block.

This macro will add to the Title Block a free text cell and will create the associated text.

The aim of this exercise is to learn how create geometry and Texts in VBScript.

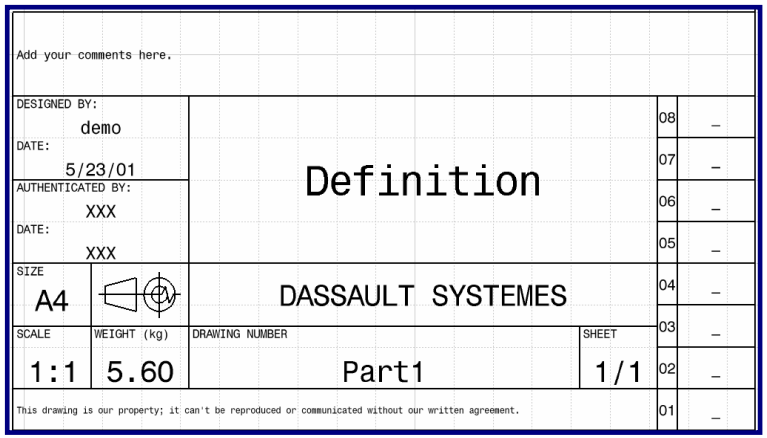

Student Notes:

Design Intent: Geometry & Free Text in VB Script

- Defining geometry variables
- Creating the geometry
- Defining the Text variable
- Creating the Text Box

```
Sub CATFrameBorder()
    '-----------------------------------------------------------------------------
    'How to draw the frame border
    '-----------------------------------------------------------------------------
    Dim Frame_Border_Bottom As Line2D
    Dim Frame_Border_Left   As Line2D
    Dim Frame_Border_Top    As Line2D
    Dim Frame_Border_Right  As Line2D

    Set Frame_Border_Bottom = Fact.CreateLine(OV, OV, OH, OV)
    Set Frame_Border_Left = Fact.CreateLine(OH, OV, OH, Height - Offset)
    Set Frame_Border_Top = Fact.CreateLine(OH, Height - Offset, OV, Height - Offset)
    Set Frame_Border_Right = Fact.CreateLine(OV, Height - Offset, OV, OV)

    On Error Resume Next
        Frame_Border_Bottom.Name = "Frame_Border_Bottom"
        Frame_Border_Left.Name = "Frame_Border_Left"
        Frame_Border_Top.Name = "Frame_Border_Top"
        Frame_Border_Right.Name = "Frame_Border_Right"
        If Err.Number <> 0 Then
            Err.Clear
    End If

End Sub
```

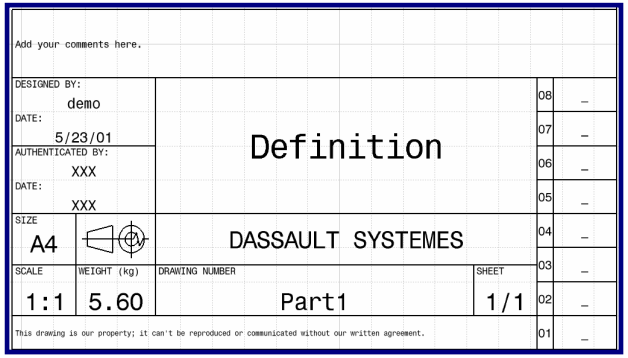

EXERCISE BOOK

Student Notes:

Do It Yourself (1/2)

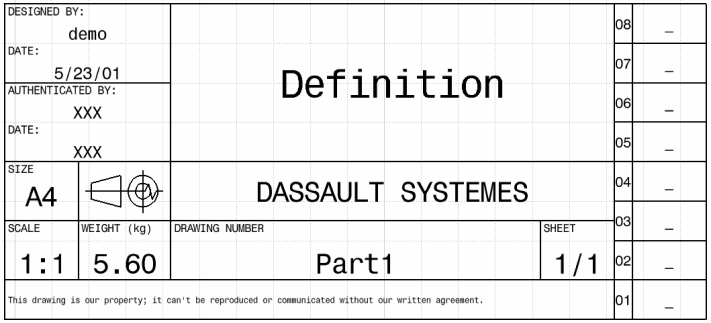

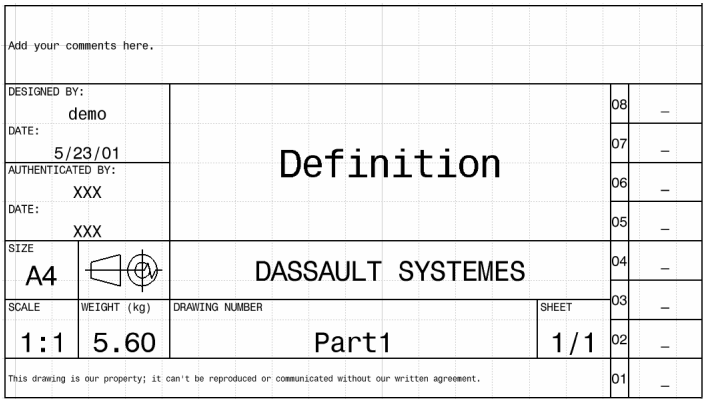

Details of the modifications next page

- **Add a subroutine called CATFreeText to TitleBlock.CATScript in order to :**
  - **Create two lines according the specifications shown next page**
  - **Create a Text Box where user can add free text. Use a 2mm font size and anchor point at the middle left. The feature name will be 'TitleBlock_Text_Rights'**

Edit: TitleBlock.CATScript

Student Notes:

Do It Yourself (2/2)

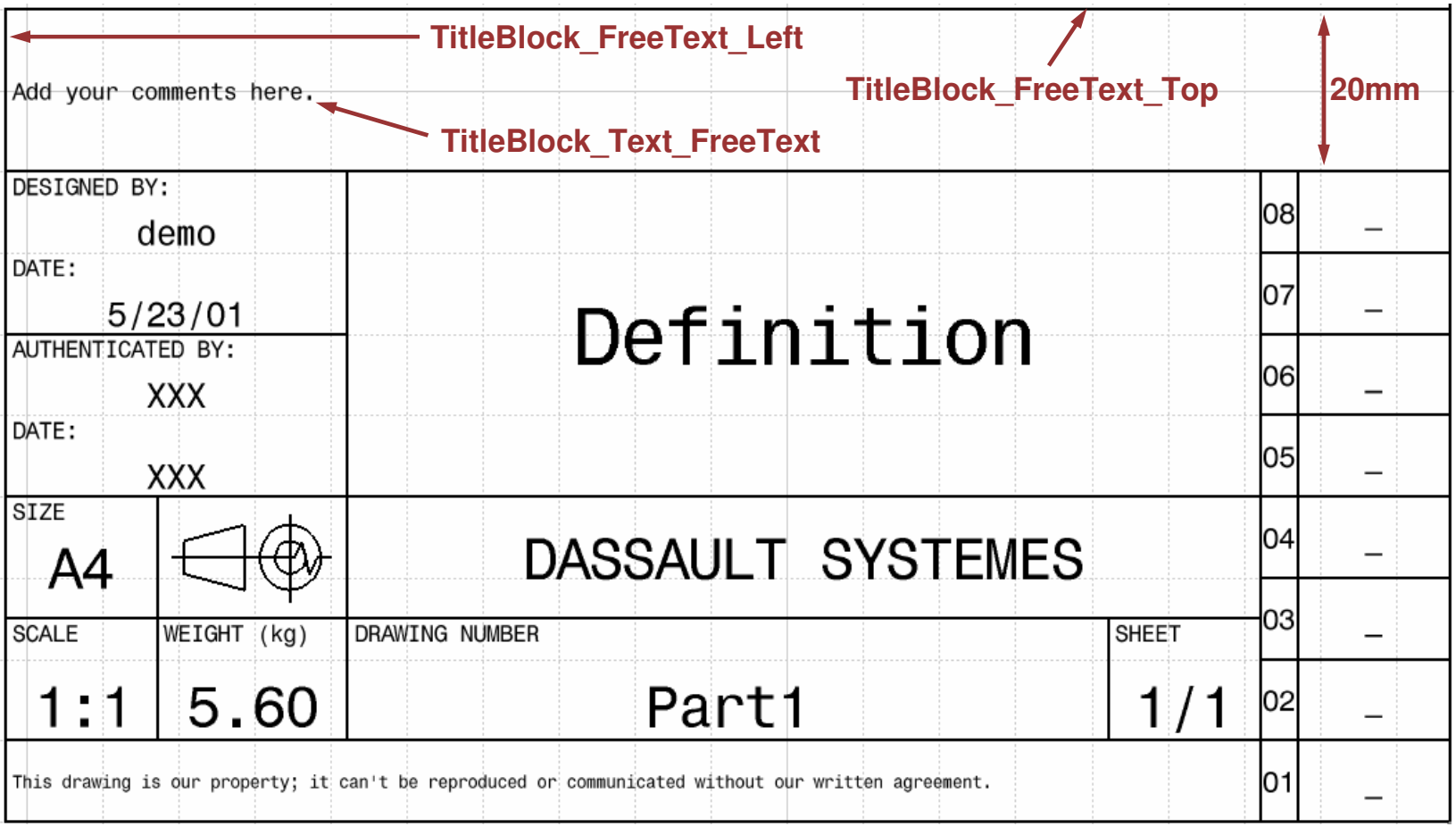

Reference Available : TitleBlock_exercise.CATScript

Student Notes:

Exercise - Filling in Title Blocks

20 min

In this exercise you will have to create a macro to fill in existing Text Box in the Title Block.

This macro will be able to display a Dialog Box to enter or modify the authenticator name and will automatically add the day date.

The aim of this exercise is to learn how modify and fill in Text Box in an existing Title Block.

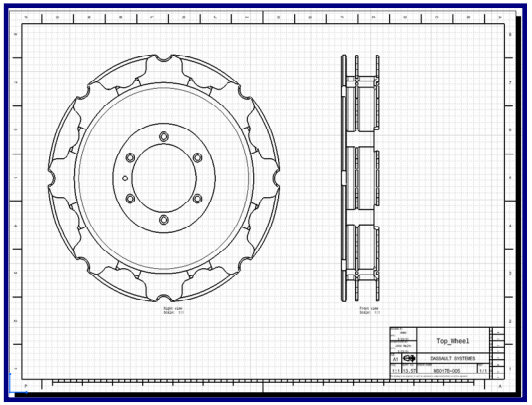

Student Notes:

Design Intent: Filling in Title Blocks

- Activate the background view
- Identify the parameters to use
- Modify Text Box

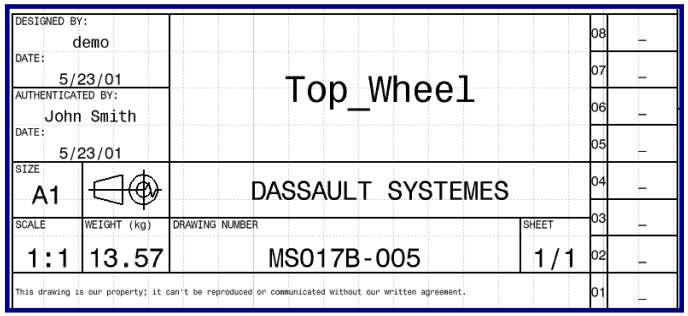

Student Notes:

Do It Yourself (1/2)

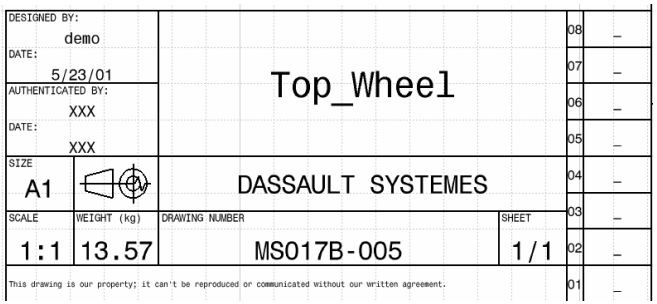

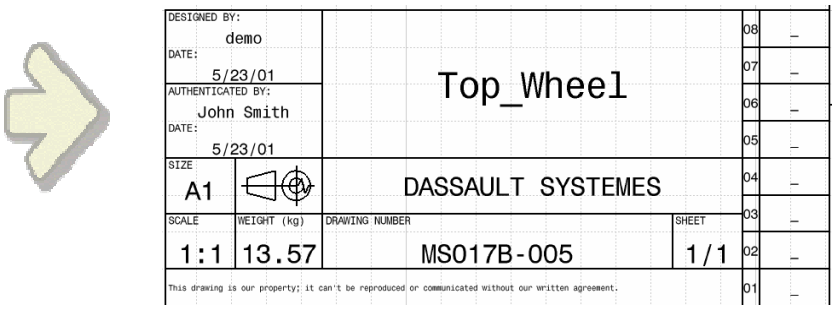

Details of the modifications next page

- **Create a macro to fill in the authenticator name and the corresponding date :**
  - **The macro must display a panel to write the name and propose by default 'John Smith' or write the current authenticator name**
  - **The macro must fill in the Text box with XXX if you don't write any word in the Dialog Box**
  - **The macro must set the date automatically**

Load: Wheel.CATDrawing

Student Notes:

Do It Yourself (2/2)

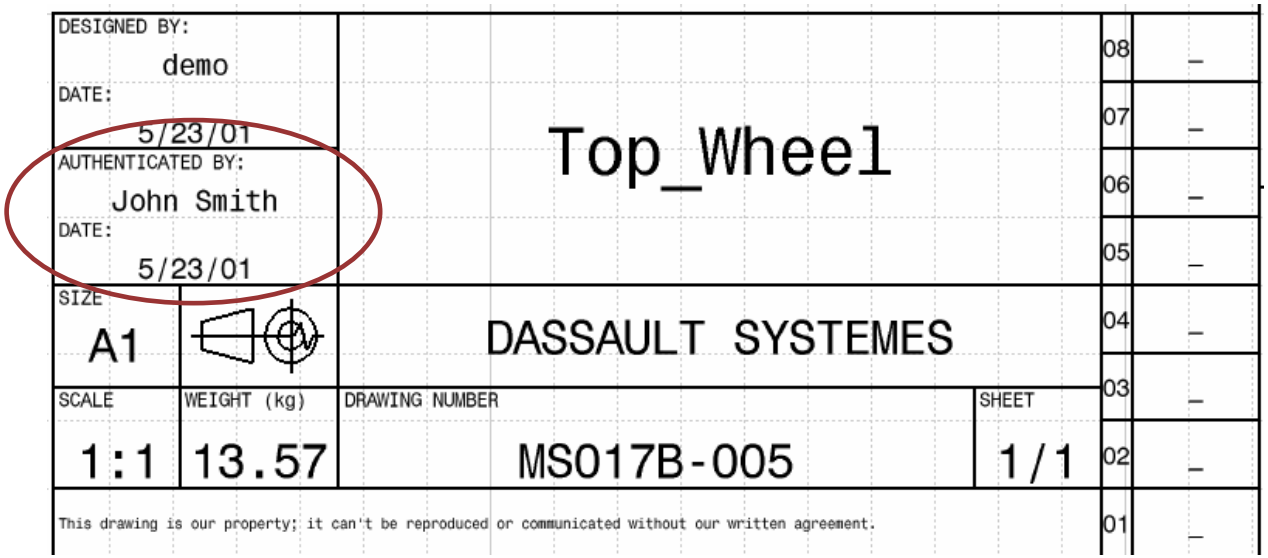

Reference Available : Fill_in_TitleBlock.CATScript